STATE OF IOWA
1930

Courses of Study for High Schools

INDUSTRIAL ARTS

Issued by the Department of Public Instruction
AGNES SAMUELSON, *Superintendent*

Published by
THE STATE OF IOWA
Des Moines

STATE OF IOWA
1930

Courses of Study for High Schools

INDUSTRIAL ARTS

Issued by the Department of Public Instruction
AGNES SAMUELSON, *Superintendent*

Published by
THE STATE OF IOWA
Des Moines

CONTENTS

FOREWORD

This course of study is one of a series of curriculum publications to be presented the high schools of the state from time to time by the Department of Public Instruction. It has been prepared by a subject committee of the Iowa High School Course of Study Commission working under the immediate direction of an Executive Committee. If it is of concrete guidance to the teachers of the state in improving the outcomes of instruction, the major objective of all who have contributed to its construction will have been realized.

From the start the need of preparing working materials based upon cardinal objectives and adaptable to classroom situations was emphasized. The use of the course of study in the development of proper pupil attitudes, ideals, habits, and skills was the criterion for selecting and evaluating subject matter material. At the same time it was important to consider the relation of the single course of study unit to the variety of textbooks used in the high schools of the state. The problem before the committees was that of preparing suitable courses of study representing the best in educational theory, practice, and research, and organized in such a way as to guide the teachers in using the textbook to greater advantage in reaching specified outcomes of instruction.

The selection of texts in this state is a function of the local school boards. The Department of Public Instruction and the committees do not recommend any particular text as essential to the working success of this course of study. The titles listed on the following pages are not to be interpreted as having official endorsement as against other and newer publications of value. They were found upon investigation to be in most common use in the high schools of the state at the time the units were being prepared; a follow-up survey might show changes.

Although many valuable studies have been made in the effort to determine what to teach and how to teach it, and to discover how children learn, these problems have not been solved with finality. For that reason and because no fixed curriculum can be responsive to changing needs, this course of study is to be considered as a report of progress. Its revision in accordance with the enriched content and improved procedures constantly being developed is a continuous program of the Department of Public Instruction. Your appraisal and evaluation of the material as the result of your experience with it are sincerely requested.

ACKNOWLEDGMENTS

The Department of Public Instruction takes this opportunity of thanking the many college specialists, school administrators, and classroom teachers who have helped with this program. Without the active coöperation of the educational forces of the state it could not have been attempted. It has had that coöperation both in general and specific ways. The support given by the Iowa State Teachers Association and the High School Principals' Section has enabled the Executive Committee to meet and also to hold meetings with the Commission as a whole and with the chairman of subject committees.

Special acknowledgment is given the Executive Committee for its significant leadership in organizing the program and to Dr. T. J. Kirby for his valuable services in directing its development. Sincere gratitude is also expressed to the various committees for their faithful and skillful work in completing the subject matter reports assigned them and to Dr. C. L. Robbins for his careful and painstaking work in editing the manuscripts. The state is deeply indebted to the High School Course of Study Commission for its expert and gratuitous service in this enterprise. Credit is due the publishers for making their materials accessible to the committees and to all who served in advisory or appraisal capacities. Many of their names may not have been reported to us, but we acknowledge our appreciation to every one who has shown an interest in this significant program.

In the following committee list, the positions held by members are given as of the school year 1928-1929.

IOWA HIGH SCHOOL COURSE OF STUDY COMMISSION

Executive Committee

Thomas J. Kirby, Professor of Education, State University of Iowa, Iowa City, Executive Chairman

A. J. Burton, Principal, East High School, Des Moines

H. M. Gage, President, Coe College, Cedar Rapids

M. S. Hallman, Principal, Washington Senior High School, Cedar Rapids

O. R. Latham, President, Iowa State Teachers College, Cedar Falls

E. E. Menefee*, Superintendent, Public Schools, Hawarden

Theodore Saam, Superintendent, Public Schools, Council Bluffs

F. H. Chandler,* Superintendent, Public Schools, Sheldon

Industrial Arts

A. P. Twogood, Chairman, Supervisor of Industrial Education, Newton

Chas. H. Bailey, Head of Art and Manual Arts, State Teachers College, Cedar Falls

Adolph Shane, Head of Industrial Arts, Iowa State College, Ames

William Galloway, Supervisor of Industrial Education, Dubuque

*Superintendent Chandler was appointed in 1929 to fill the vacancy created by the resignation of Superintendent Menefee.

Harold Singer, Industrial Arts Teacher, Lyons
R. C. Woolman, Director of Industrial Education, Des Moines
W. C. Wood, Supervisor of Industrial Arts, Davenport
F. A. Sanders, Industrial Arts Teacher, Perry
W. M. Phares, Supervisor of Industrial Education, Fort Dodge
Fred Schmidt, Superintendent of Schools, Boxholm
Walter McMahan, Supervisor of Industrial Education, Clinton
H. W. Carmichael, State Supervisor of Industrial Education, State House, Des Moines

GENERAL INTRODUCTION

At the first general meeting of the various subject committees a suggestive pattern for the courses of study, embodying the fundamental needs for teaching, was projected. Four crucial factors that should be emphasized in any course of study to make it an instrument that would cause teachers to consult it for guidance in the performance of their daily work were set forth as follows: objectives, teacher procedures, pupil activities, and evidences of mastery.

Objectives—The meaning of objectives as here used is those concepts which are set up for pupils to achieve. As used in current practice, there is a hierarchy of objectives as shown by the fact that we have objectives of general education, objectives for various units of our educational system such as those proposed by the Committee on Cardinal Principles, objectives for subjects, objectives for a unit of instruction, and objectives for a single lesson. In each level of this hierarchy of objectives a constant element is expressed or implied in the form of knowledge, a habit, an attitude, or a skill which pupils are expected to acquire.

In the entire field of secondary education no greater problem confronts us than that of determining what these fundamental achievements are to be. What shall be the source of those objectives, is a problem of too great proportions for discussion here, but it is a problem that each committee must face in the construction of a course of study. A varying consideration of objectives by the various committees is evident in the courses of study they have prepared. The value of the courses varies in terms of the objectives that have been set up, according to the value of the objective in social life, according to the type of mental techniques which they stimulate and exercise, and according to the objectivity of their statement.

Pupil Activities—In our educational science we are attaching increasing significance to self-activity on the part of the learner. Recognition is made of the fundamental principle that only through their own activity pupils learn and that the teacher's rôle is to stimulate and direct this activity. No more important problem faces the curriculum-maker than that of discovering those fundamental activities by which pupils learn. In a well-organized course of study, that series of activities, in doing which pupils will attain the objectives set up, must be provided. These activities must not be chosen in a random fashion, but care must be taken that appropriate activities for the attainment of each objective are provided.

Teacher Procedures—With the objectives determined and the activities by which pupils learn agreed upon, the function of the teacher in the pupil's learning process must be considered. In a course of study there should appear those teacher procedures of known value which make learning desirable, economical, and permanent. Here our educational science has much to offer. Where research has demonstrated with a high degree of certitude that a given technique is more effective in the learning process than others, this technique should be included in a course of study. Common teaching errors with sug-

gested procedures to replace them may be included. Pupil difficulties which have been discovered through research should be mentioned and methods of proven value for meeting these difficulties should be included. Suggested ways of utilizing pupils' experiences should be made. And as important as any other feature is the problem of motivating learning. Whatever our educational research has revealed that stimulates the desires of pupils to learn should be made available in a course of study. Valuable types of testing should be incorporated as well as effective type assignment. The significance of verbal illustrations as evidence of comprehending the principle at issue should be featured as a procedure. Where there is a controlling procedure of recognized value such as is recognized in general science—bringing the pupil into direct contact with the phenomena studied—forceful effort for the operation of this procedure should be made.

Evidences of Mastery—What are to be the evidences of mastery of the objectives set up? There are all degrees of mastery from the memoriter repetition of meaningless terms up to a rationalized comprehension that shows grasp of both the controlling principles involved and the basic facts necessary to a clear presentation of the principles. These evidences of mastery may be in the form of dates *to be known,* formulae *to be able to use,* types of problems *to be able to solve,* quality of composition *to produce,* organization of materials *to be made,* floor talks *to be able to give,* papers *to be able to write.*

In no part of educational procedure is there need for more effort than in a clear determination of those evidences, by which a well-informed teaching staff can determine whether a pupil has a mastery of the fundamental objectives that comprise a given course. As we clarify our judgments as to what comprises the essential knowledge, habits, attitudes, and modes of thinking involved in a certain course, we can set forth with more confidence the evidences of mastery. Teachers are asking for the evidences of mastery that are expected of pupils, and courses of study should reveal them.

While these four elements constituted the basic pattern, the principle of continuity from objective to pupil activity, to teacher procedure, to evidence of mastery was stressed. The maker of a course of study must bear in mind that what is needed is an objective having accepted value; a pupil activity, in performing which, pupils gain a comprehension of the objective that is now being considered; that a teacher procedure is needed which evidence has shown is best adapted to stimulating pupils to acquire this objective for which they are striving; and that evidences of mastery must be incorporated into the course by which to test the degree of comprehension of the objective now being considered.

The courses of study vary in the degree to which these four fundamental features have been objectified and in the degree to which the principle of continuity from objective to evidence of mastery has been cared for. On the whole they will provide effective guides which teachers will use.

Realizing that these courses of study were prepared by school men and women doing full time work in their respective positions, one fully appreciates the professional zeal with which they worked and the splendid contribution to high school education which they made.

THOMAS J. KIRBY,
Chairman of the Executive Committee

COURSE OF STUDY FOR INDUSTRIAL ARTS

INTRODUCTION

There are certain general objectives which the industrial arts contribute to the program of education as a whole. These are:

1. To make contact with the practical applications of mathematics and science; *i.e.*, measuring, estimating, construction of mechanisms, electric circuits, etc.
2. To develop initiative and creative thinking; to strengthen interest in the problems to be solved
3. To awaken avocational interests in the pupil
4. To acquire industrial information as a means to:
   a. Educational and vocational guidance
   b. Intelligent selection and consumption of the common commodities with which the pupil will come in contact
5. To develop self-expression through participation in various shop activities
6. To develop physical and mental coördination through the use of the common hand tools and materials; *i.e.*, to develop manual skill
7. To develop skill in home construction and repairs
8. To acquire interest which may lead to training of a definite vocational type

The committee wishes to express its appreciation of the splendid spirit of coöperation which it has had from fellow teachers. It is especially indebted to Mr. J. H. Gooch, of the Des Moines schools, for the preparation of the drawings; to Mr. Wm. L. Hunter, Iowa State College, Ames, Iowa, for use of the results of some of his research; to the publishers of the *Industrial Arts Magazine* and the *Industrial Education Magazine* for permission to use drawings on which they hold the copyright.

SUGGESTIONS TO TEACHERS

In view of the fact that the great majority of the schools in Iowa require one year of industrial arts in the ninth grade, the following outlines have been prepared on this level. The committee has assumed that the class will meet for ninety minutes daily throughout the entire year. Work beyond the ninth grade is generally elective, and the committee has, therefore, made no attempt to outline it, feeling that the needs of the school will best determine what electives shall be given.

After carefully surveying the industrial arts field, it was decided that the work should be limited to four subjects—mechanical drawing, woodworking, electricity, and metalworking. There are other subjects equally good educationally, but these are basic courses which may be offered with a minimum of equipment. The recommended time allotment is as follows:

9B—Mechanical Drawing	9 weeks
Woodworking	9 weeks
9A—Practical Electricity	9 weeks
Metalworking	9 weeks

If it is desired to start the work in the seventh grade on a two-period a week basis the time allotment should be as follows:

7B—Mechanical Drawing	18 weeks
7A—Woodworking	18 weeks
8B—Practical Electricity	18 weeks
8A—Metalworking	18 weeks

The list of projects is suggestive and need not be strictly followed. However, these projects do teach the skills which are probably most essential, and if substitution is made it should be only after careful analysis of the new project to determine just what it will teach.

Teachers are urged to experiment constantly with the course of study with the idea of improving and adapting it to the local circumstances. It has been difficult to prepare a course which would be usable by schools ranking from the smallest to the largest. However, the essentials of the course should ultimately be the same, regardless of locality, just as the content of a first semester algebra course shows the same general features throughout the country. The projects by which the course is motivated must be selected to appeal to the needs and interests of the pupils. If these projects do not carry this appeal for your pupils others should be substituted, but a careful analysis of the new projects should precede any modification.

In the field of tests there are several which have proved valuable and the teacher is urged to use them. Those recommended by the committee as being outstanding are:

Nash and Van Duzee, *Standard Tests—Woodworking,* Bruce Publishing Co., Milwaukee

Nash and Van Duzee, *Standard Tests—Mechanical Drawing,* Bruce Publishing Co., Milwaukee

Fischer, *Mechanical Drawing Tests,* Bruce Publishing Co., Milwaukee

Hunter, *Shop Tests,* Manual Arts Press, Peoria

Castle, *Mechanical Drawing Test,* Manual Arts Press, Peoria

Wells and Laubach, *Mechanical Drawing Test,* Manual Arts Press, Peoria

Wells, *Standardized Completion Tests in Shopwork,* Manual Arts Press, Peoria

In order to make the industrial arts program most effective the following suggestions are offered:

1. Care should be taken to instruct the pupil to a high standard in the various manipulative skills of the course
2. The presentation of the related knowledge should be definitely correlated with the materials and skills used in each project
3. Training in orderly and economical habits in the requisitioning and use of materials, and the care of the shop and equipment should be purposefully planned
4. Specific instruction in design should be provided
5. Thought-producing instruction which will stimulate the pupil's mental faculties is essential for best results
6. A variety of subjects and projects should be provided to care for individual differences
7. Inspection of industrial plants, construction work and processes, supplemented by motion pictures and lantern slides should be carried out to give concreteness to the program

THE CARE OF THE SHOP

The condition of the shop, as regards its neatness, cleanliness, orderliness, has much to do with the shop teacher's success in a community. The most immediate effect of a tidy shop is upon the pupils. If the teacher wishes to

keep the respect of those in his classes, if he wishes to have prevalent in his shop an atmosphere conducive to producing desirable habits and attitudes on the part of the pupils, he must do his very best to have his shop shipshape at all times. The care of the shop is as much a pupil's responsibility as a teacher's responsibility, and the pupils should be trained to assume this responsibility.

Then, in addition to the pupils, there are those in the school organization who very soon are going to notice whether or not the shop is cared for as it should be. So easy it is for the janitor, the fellow-teacher, the principal, the superintendent, or a member of the board of education to distinguish the well-kept shop from the untidy one that it behooves any shop teacher to keep a constant watch on the condition of his place of work.

Last, but not least, is the patron of the school, the parent who is interested in his boy and visits occasionally to look around and get acquainted. His faith in your work will be strenghthened in proportion to the attractiveness of your shop. This is often the only basis for his judgment.

All these persons taken together form a group which may determine the success or failure of the teacher. First impressions carry great weight and it is very important that the teacher should allow nothing to detract from a favorable reaction towards the shop and its work.

The following is a check list which may serve as a guide to the teacher. It was compiled from lists made up by twenty-eight successful teachers.

AN ORDERLY SHOP HAS

	YES	NO
1. An orderly lumber rack or room		
2. Tools cared for in an orderly manner		
3. Benches well arranged and cared for		
4. The floor cleaned daily		
5. A well-kept place for finishing		
6. A covered container for oily rags and waste		
7. The blackboard clean and presentable		
8. Storage space for unfinished projects		
9. All tools and machinery kept clean of oil, dirt, and rust		
10. A bulletin board for charts, pictures, notices, etc.		
11. The glue bench and the glue pot clean		
12. The books, blueprints, magazines, and reading material kept clean and in order		
13. Storage space for finished projects		
14. The cases, window ledges, etc. dusted frequently		
15. The material on the bulletin board kept in order and changed frequently		
16. The pupils wearing clean aprons or unionalls		
17. A box for scraps or odd material		
18. The windows washed occasionally		
19. The sink or lavatory cleaned daily		
20. The lockers kept clean and orderly		
21. The teacher's desk kept in order		

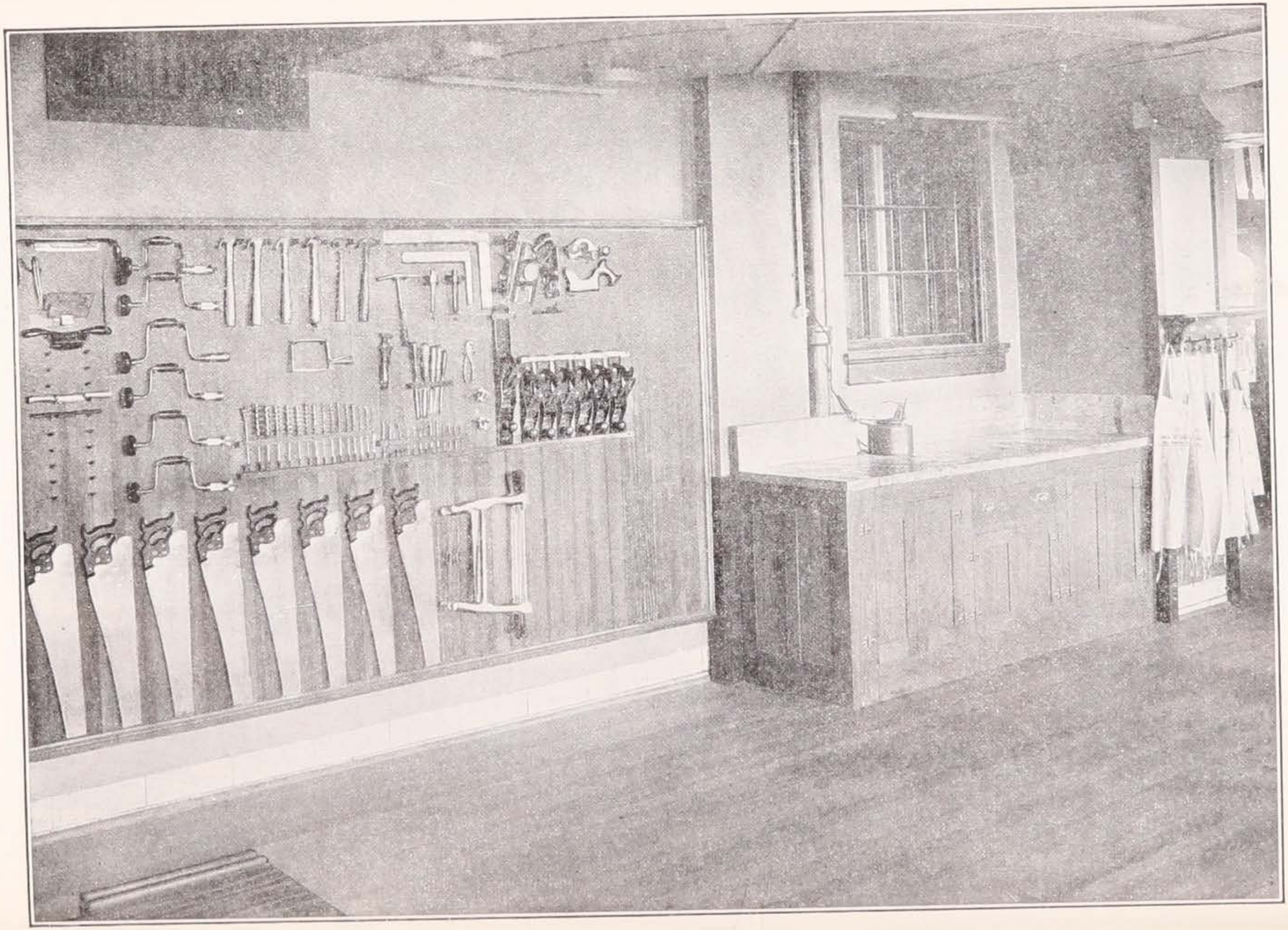

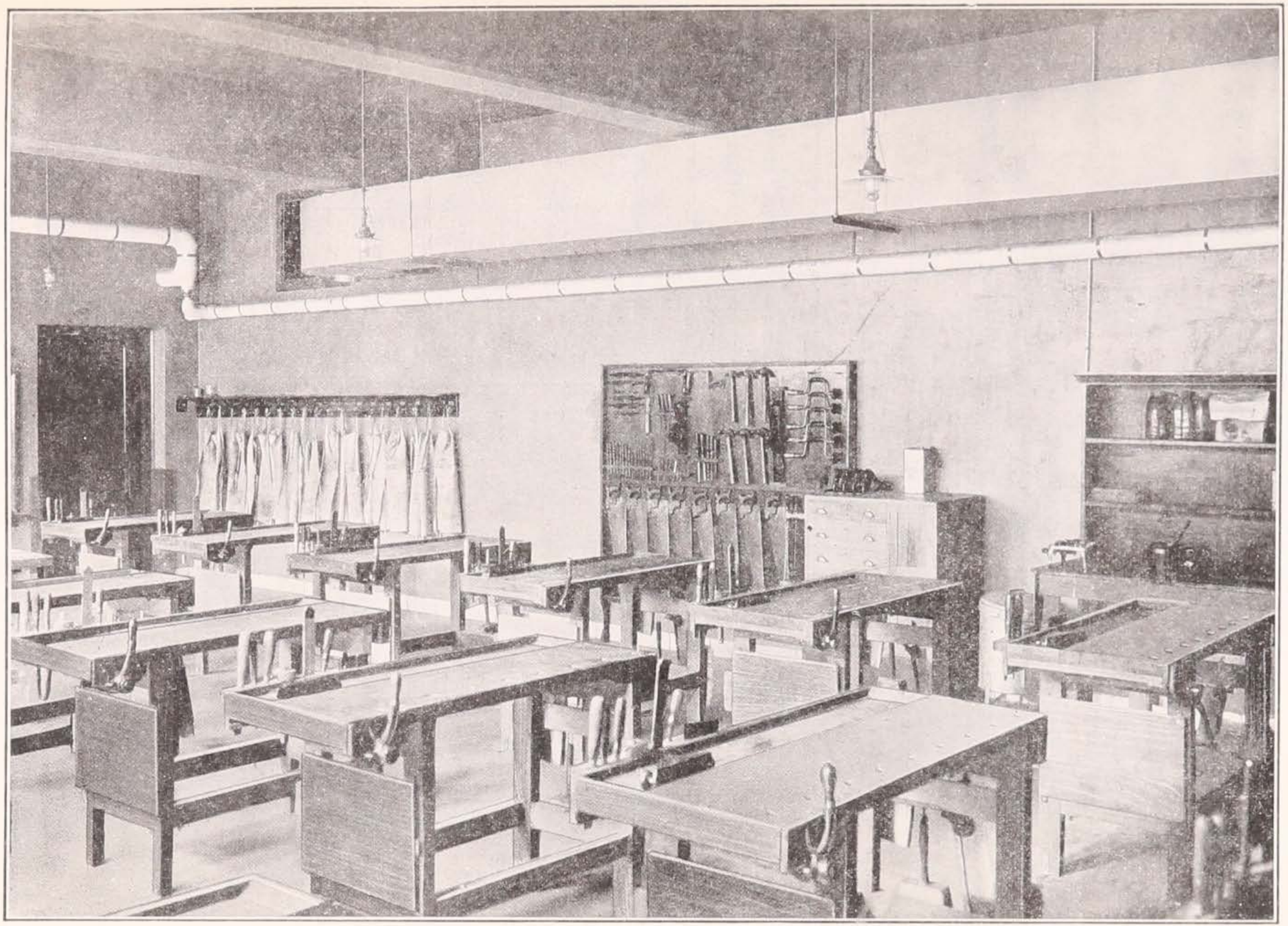

SUGGESTED SHOP RECORD FORMS (Sheet 8½" x 11")

INVENTORY SHEET—INDUSTRIAL DEPARTMENT

Sheet No. .....

☐ Supplies

Date Taken.....

☐ Tools

☐ Equipment

School..... Room..... Teacher.....

Tools, Equipment and Supplies	Sept 19....	New this year	Total	Lost or broken Used	June 19....	Remarks

BILL OF MATERIAL (Card 4" x 6")

Name..... Date..... Class.....

Project..... Semester..... Year.....

Part	Pcs.	T	W	L	Materials	Ft.	Pr.	Total	Remarks

Received Payment Date.....

Amount ..... Instructor.....

PROGRESS CHART

Projects or Drawing Plates

Subject.....

Class.....

Semester.....

Year.....

NAMES	1	2	3	4	5	6	7	8	9	10	11	12

(Number of spaces for names and for projects may be varied to suit the subject and the class)

OUTLINE FOR ORGANIZATION OF TEACHING MATERIAL INTO PROCESS, UNIT-OPERATION, AND INFORMATION SHEETS

When the content of any given subject has been determined, the first question is, How shall it be taught? After an analysis of various methods of teaching it is recommended that the instruction and information sheet plan be used. Some of its advantages are:

1. Permits more attention to individual pupils in the class by relieving the teacher of considerable routine

2. Teaches the pupil to read and think accurately and to follow written instructions

3. Permits the introduction of a large amount of related and general information

4. Provides a check on mental development as well as the development of manipulative skill

5. Tends to create a more efficient system and organization in the shop

6. Permits the instructor to teach instead of waiting upon his pupils

There are some cautions to be observed in the use of instruction and information sheets.

1. Instruction and information sheets cannot replace the teacher

2. These sheets must be accompanied by class demonstrations and discussions

3. As the pupil progresses in his work he should be taught to prepare his own job or project sheets after an analysis of his project. In this way his reasoning powers will gradually become developed. The ability to develop his own material is as much an aim of the course as the ability to do acceptable hand work

There are two general types of instruction and information sheet organization.

1. Those having the instructions and related information on the same sheet

2. Those having instructions and related information on separate sheets. The second plan is given the preference by the committee

In order that the use and preparation of instruction (process, unit-operation, and job or project) sheets and information sheets may be understood it is recommended that the following plan of organization be used. Let us take woodworking as an example.

1. Make a list of all tool processes to be taught in the woodwork course (sawing, planing, chiseling, boring, etc.)

2. A process sheet giving specific instruction for the carrying out of each tool process should be prepared

3. These process sheets should be assigned index numbers for reference on later project or job sheets

4. Make a list of all unit-operations which are to be taught (squaring to size, half-lap joint, mortise-and-tenon joint, staining and filling, finishing with shellac and wax, etc.)

5. Prepare unit-operation sheets for each of these operations referring to the tool process sheets by their index numbers

6. These unit-operation sheets should also be indexed for reference purposes

7. Make a list of all related information, such as lumbering, growth of wood, tool manufacture, glue, finishing material, screws, nails, etc., which is to be taught during the course

8. Prepare related information sheets on each of the subjects as called for under No. 7. These information sheets should also be assigned reference or index numbers

With the above tool processes, unit-operations, and information analyzed, classified and indexed, the construction of the job or project sheet to fit a specific project may be begun. The following outline is recommended. (Items A, B, C, E, contributed by pupil)

A. The project to be made

B. List of tools and equipment needed
   1. Tool process sheets to be referred to by their index numbers
C. List of material needed
   1. Information sheets on lumber, glue, etc., to be referred to by their index numbers
D. Specific instructions applying to this project only
E. Construction steps
   1. Operation sheets on squaring to size, the construction of the joint called for, finishing, etc., to be referred to by their index numbers
F. Sketches, if needed
G. Precautions, if any
H. Questions

The following suggestions are made for the construction of an information sheet. It must be kept in mind that the information sheet carries related information only, and does not give instructions for doing any particular job. The information sheet should be in outline form to direct the pupil's study of the subject.

A. Subject of information sheet
B. General information
C. Specific information
D. References
E. Questions

To further clarify the subject a graphic illustration of the relationship of sheets is given:

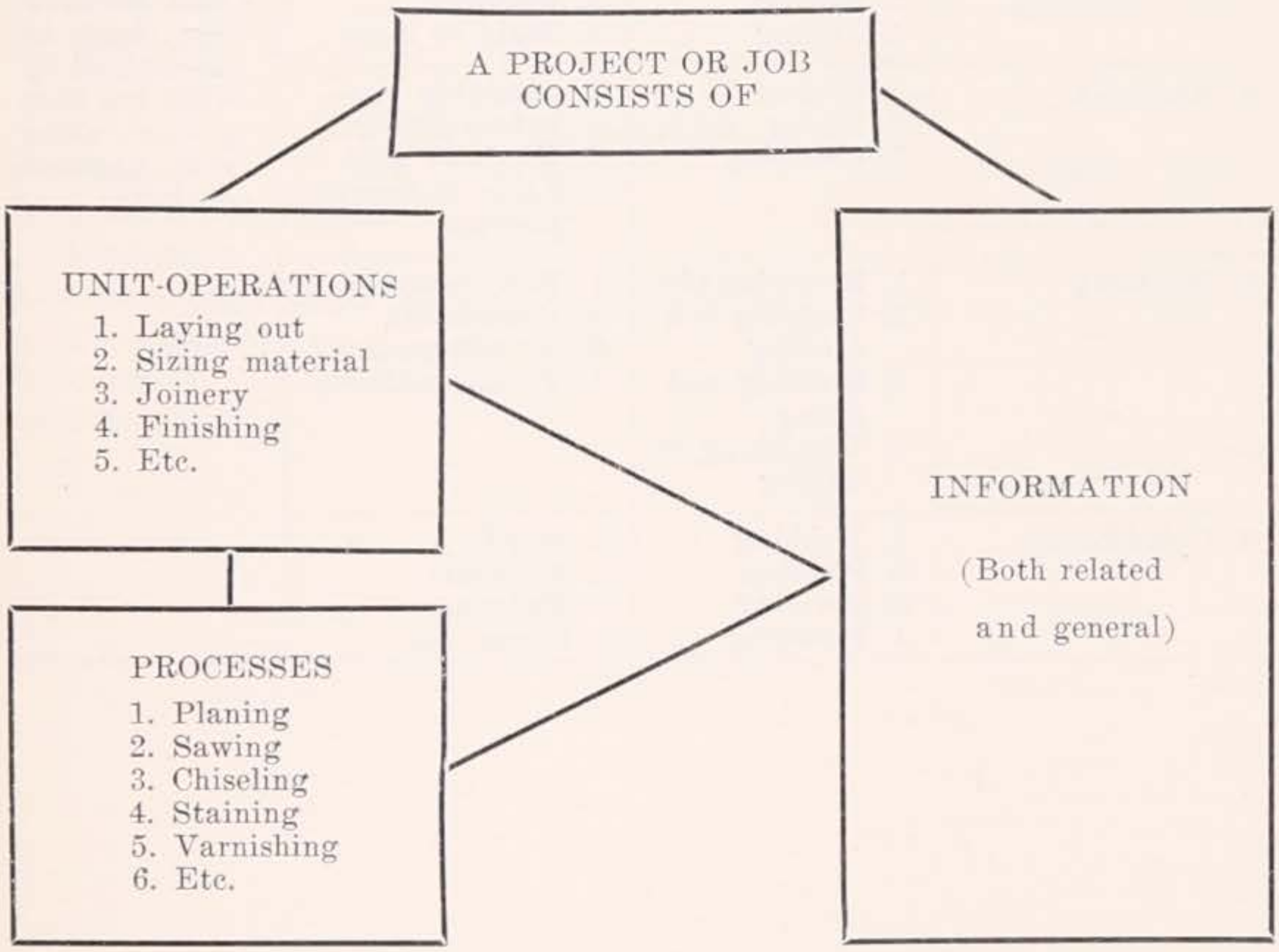

The system described is not so difficult as it appears and it provides great flexibility. With the three types of sheets, Tool Process Sheets, Unit-Operation Sheets, and Information Sheets, it is possible to construct a Project or Job Sheet for any project whether it is on the seventh-grade or the twelfth-grade level. The Project or Job Sheet is the only one which will vary. The proper use of the tools and the information related to the materials will remain constant regardless of the project. It is possible to apply this system to any subject provided the fundamentals are analyzed, classified, and indexed.

SAMPLE ANALYSIS BLANK

Project or Job: (*Foot Stool*)

UNIT-OPERATIONS	PROCESSES	RELATED INFORMATION	GENERAL INFORMATION
1. Laying out	1. Measuring 2. Estimating	1. Use of rule 2. Square as layout tool 3. Board measure	Suitable woods
2. Sizing material	1. Planing 2. Gauging 3. Testing 4. Sawing	1. Use of plane 2. Use of gauge 3. Use of saw 4. Square as testing tool	Lumbering processes
3. Making joints	1. Laying-out 2. Boring and chiseling 3. Sawing 4. Fitting	1. Accuracy 2. Use of boring tools and chisel 3. Accuracy 4. Tight or loose	Designs (This information must be determined by what has been given along with previous projects)
4. Assembly	1. Testing 2. Gluing 3. Clamping	1. Assembly test before gluing 2. Kinds of glue 3. Kinds of clamps; pressure	
5. Finishing	1. Removing glue 2. Scraping and sanding 3. Staining and filling 4. Varnishing or waxing	1. How removed 2. Precautions 3. To suit material 4. To suit material	
6. Upholstering	1. Webbing 2. Padding 3. Covering 4. Finishing	1. Why? 2. Materials 3. Materials 4. Gimps, etc.	

SUGGESTED FORMS FOR OPERATION, PROCESS, INFORMATION, AND PROJECT SHEETS

Operation Sheet

A.—Unit Operation
B.—Processes
C.—Information
D.—Procedure
E.—Sketches
F.—Precautions
G.—References

No. .....
Unit.....

Process Sheet

A.—Specific Process
B.—Tools
C.—Information
D.—Procedure
E.—Sketches
F.—Precautions
G.—References
H.—Questions

No. .....
Unit.....

Information Sheet

A.—General
B.—Related
C.—References
D.—Questions

No. .....
Unit .....
Subject.....

Project Sheet

A.—Project
B.—Tools and Equipment
C.—Materials
D.—Special Instructions
E.—Procedure
F.—Sketches
G.—Precautions

No. .....
Unit.....

MECHANICAL DRAWING

Introduction

The course is organized for a class meeting daily for nine weeks.

While this outline is intended for pupils with no previous training in drawing the committee recognizes that individual differences appear earlier in mechanical drawing than perhaps in any other course. The assignment of problems is sufficiently elastic to permit an adjustment to the needs of each pupil.

It is desirable to use a textbook as the basis of the course, and to hold pupils responsible for a fair mastery of the material and technique of drawing. The committee recognizes that there are good texts other than those listed, and the teacher will find little difficulty in adapting most any good text to the requirements of the outline.

Teach drawing as a language. Teach the pupils to realize that the drawing has a story to tell and the important thing is to make the drawing so that it tells its story correctly and is readily understood. Do not permit pupils merely to copy drawings. Present the materials in such a way that pupils must understand the principles in order to solve the problems. Use objects, pictorial sketches, and incomplete working drawings as a means of giving the data to work from. Stress correct methods of procedure and technique.

The specific objectives are arranged as sequentially as possible. This however, does not mean that they must be dealt with in the exact order listed. The teacher must study the entire outline, gain a comprehensive view of the purpose and plan of the outline as a whole, and then endeavor to carry it out in the best way possible for the class he is teaching.

It is highly desirable that there be close correlation between the drawing and the other shop subjects. Whenever possible have pupils sketch projects and problems in other subjects and it will not be long until the fundamental principles of drawing and their application will be quite thoroughly mastered.

Specific Objectives

Skills or Abilities

1. To recognize views from their relationship and placement on the paper

   To recognize the form, relationship of parts, and the features of an object from the views given

   To understand correctly dimensions from the data given on the drawing

   To form a clear mental picture of the object from the drawing

Knowledge

1. Differences between a picture and a drawing of the same object

   Correct relationship of views to each other on the paper to correspond to any given position of the object in space

   Kinds of lines and conventions used

   Common rules for dimensioning in order to interpret dimensions

   Meaning of sectional views

Suggested Type Problems

1. Use blueprints or blackboard drawings for drill in reading

   Problems in books (Reading practice only)

   Castle, Problems 1-10

   Wood, Problems 2, 7, 31, 33, 39, 40, 43, 70, 75

   Bailey, Figures 19, 22, 27, 38, 41, 47

   Ermeling, Fischer, and Greene, Problems 1, 3, 1a, 1b, plate 5

   French and Svensen, Chapter III, pp. 21-29

   Crook, Unit I

   Berg and Kronquist, p. 25

2. Use squared paper for sketching. Make freehand drawings of problems at random throughout course

   Wood, Problems 1-10

   Bailey, Problems 1-10

   Ermeling, Fisher, and Greene, First year, Plate II

   French and Svensen, Problems 42-57

   Crook, Problems 3-9

   Berg and Kronquist, Plates 4-10

Evidences of Mastery

Basis for rating drawings

1. Accuracy 40%
2. Appearance 25%
3. Knowledge 20%
4. Technique 10%
5. Speed 5%

1. Accuracy 40%

   This should be interpreted as including the following:

   Views correctly placed; best views shown; all shape information correctly and completely given; all size information correctly and completely given; notes correctly stated; measurements accurately made; lines accurately drawn; dash lines and full lines properly connected; and other points of like nature which determine the accuracy and correctness of a drawing

   Means of testing accuracy

   a. By inspection of finished drawings of regular problems

   b. By special test problems

2. Appearance 25%

   This includes the following:

   Uniformity and correct weight of lines; formation and size of letters; spacing of letters; views

Skills or Abilities

2. To use pencils correctly and accurately in making sketches of objects in working drawing form without instruments

   To judge proportions and dimensions of objects

   To follow an approved order of procedure in making sketches

   To develop accuracy in observation, thought, and representation

3. To make well-proportioned, well-spaced vertical or inclined capital letters and numerals with reasonable speed and accuracy

   To judge form and proportion of letters and numerals

   To word notes and other data on drawings clearly

   To criticize one's own work constructively

4. To determine the best position of an object in space so as to show the best views of the object

   To place views on the paper in correct relationship to each other to correspond with the position of the object in space

   To use correctly and neatly the conventional lines and symbols, object lines, invisible lines, extension and dimension lines, center and construction lines, arrow-heads and figures

5. To lay out systematically a sheet in readiness for the drawing

   To choose the best method of procedure for the problem in question

   To calculate the position of the views on the paper

   To lay out the views quickly and correctly in accordance with the method determined upon

Knowledge

How to interpret scale drawing

2. Freehand sketches are often as satisfactory as accurate, measured drawings in the making of an object

   Completeness is first essential of a drawing

   Steps in sketching:

   a. Form mental picture of object
   b. Determine necessary views
   c. Observe proportions and dimensions
   d. Sketch views as a group, not each one singly
   e. Check for completeness and accuracy
   f. Finish with dimensions

3. Correct proportion and form of letters and numerals

   Some approved systems of forming letters and numerals

   Basis for good spacing of letters and numerals

   Information necessary on a drawing, and how best to state it

   Advantages and disadvantages of various styles of lettering

4. Correct position of the views on the paper. Line notation and the common conventions used

   Purpose of dimensions and what dimensions the workman needs

   Rules for dimensioning

   Use of sectional view

   Cross-hatching

   Use of the scale in making drawings of reduced or enlarged size

5. Some approved methods of procedure, and the detailed step

Suggested Type Problems

3. Lettering practice

Wood, pp. 33-36; 43, 54, 55, 61, 62

Bailey, pp. 16-18; 36

Ermeling, Fisher, and Greene, pp. 10-13

French and Svensen, pp. 15-20

Crook, pp. 28-31

Berg and Kronquist, Plates, 2, 16

Evidences of Mastery

well placed; good connections of lines at angles; good connections of tangents; uniform spaces and dashes in dash lines; good arrow-heads and numerals; freedom from erasure marks, pencil indentations and other blemishes; and other things which affect the appearance of the drawing

This is tested by inspection of the finished drawing

4, 5, 6, 7. Make with instruments a number of the problems already sketched

Use problems such as the following, taking them progressively as indicated in the books

Wood, Problems 11-41

Bailey, Problems 11-35

Ermeling, Fisher, and Greene, Plates 3, 4, 5; Second semester, Plate 4

French and Svensen, Problems 42-72

Crook, Units II and III

Berg and Kronquist, Plates 4-15A

3. Knowledge 20%

This includes the pupils' understanding of such things as:

Principles of representation used in working drawings; proper methods of procedure in making drawings; rules for dimensioning; care and use of instruments; materials used; methods of duplicating drawings; and other information which they have been taught

This is tested by questions and answers, oral and written (See tests in references)

Various duplicating processes

Skills or Abilities	Knowledge
To work through the drawing in definite steps, each being completed before the next step is begun	involved (Example follows)
To check each step carefully	a. Laying out stage
	b. Pencilling stage
	c. Dimensioning stage
	d. Finishing stage
6. To use T-squares and triangle correctly to draw horizontal and verticle lines	Reasons for procedure followed
	Reasons for different procedures for different types of problems
To use these instruments correctly for drawing lines at all angles	6. Principles of relationship upon which the use of the T-square and triangles is based
To use the scale correctly for making measurements full size or reduced	The scale and its uses, and the relationship of graduations to the scale used
To use pencil skillfully for drawing lines of the character desired	Degrees of hardness in which pencils are made, and the proper hardness to use for different lines
To use compasses correctly for drawing circles and arcs of circles	Common geometry of circles and angles
To use dividers correctly for laying off measurements or duplicate spacing	Mechanics and adjustments of the compass and dividers
To use erasers properly	
To use "French curves" correctly	
To care for drawing instruments properly	
7. To visualize the planes of projection in space	7. Theoretical relationship of planes of projection in space
	Simple rules of projection
To see clearly the different views of the various features of an object, such as points, lines, and surfaces	Relationship between orthographic and working drawings
To locate points, lines and surfaces and determine measurements by projecting from one view to another	Projection is the simplest and easiest method to locate features of an object in the different views
To determine accurately the position of any feature of an object in one view when it has been correctly represented in two other views	
8. To put tracing and blueprint paper in the printing frame correctly	8. What blueprint paper is and what happens when a print is made
	Papers are made with different printing speeds; advantages and disadvantages of each
	Purpose of exposing and washing
	Results of overexposure; underexposure; too much or too little washing

Suggested Type Problems	Evidences of Mastery
8. Have pupils trace and blueprint one or two problems which they have drawn	4. Technique 10% This includes methods of approach to problem; procedure in placing problem on paper; formation of letters and numerals; proper use of instruments Tested by observation of pupils at work
9. Make a list of school subjects in which knowledge of drawing is valuable Take ten occupations at random determine values of knowledge of drawing a. Directly b. Indirectly Prepare charts, designs, etc., as needed in other school subjects	5. Speed 5% Rate at which pupil works Tested by recording time required to make drawings. Little emphasis should be placed on speed with beginners The ability to make satisfactorily a working drawing of an object within the pupils' range is further evidence of mastery

Skills or Abilities	Knowledge
To judge light conditions and progress of printing so as to give correct exposure	9. Variety of uses for drawing instruments and a knowledge of drawing in connection with other school work, as well as outside problems. Graphs, charts, designs, etc.
To judge time for correct washing	
To determine how a duplicate drawing has been produced	
9. To recognize when and where a knowledge of drawing can be used in connection with other school subjects, such as mathematics, physics, etc.	
To apply the principles learned and the skills acquired to problems of a different nature from those worked out in the class	
To recognize the value of drawing in various occupations	

REFERENCES

1. Bailey, *Mechanical Drawing for Beginners*, Manual Arts Press, Peoria
2. Bennett, *Problems in Mechanical Drawing*, Manual Arts Press, Peoria
3. Berg and Kronquist, *Mechanical Drawing Problems*, Manual Arts Press, Peoria
4. *Industrial Arts and Vocational Education*, Bruce Publishing Co., Milwaukee
5. Castle, *Mechanical Drawing Test*, Manual Arts Press, Peoria
6. Castle, *Problems in Blueprint Reading*, Manual Arts Press, Peoria
7. Crook, *Simplified Mechanical Drawing*, McGraw-Hill, New York
8. De Vette, *Short Course in Mechanical Drawing*, Bruce Publishing Co., Milwaukee
9. Ermeling, Fischer, and Greene, *Mechanical Drawing, First Year*, Bruce Publishing Co., Milwaukee
10. Fischer, *Mechanical Drawing Test*, Bruce Publishing Co., Milwaukee
11. French and Svensen, *Mechanical Drawing for High Schools*, McGraw-Hill, New York
12. Kepler, *Mechanical Drafting Handbook*, Bruce Publishing Co., Milwaukee
13. *Industrial Education Magazine*, Manual Arts Press, Peoria

14. Nash and Van Duzee, *Standard Test—Mechanical Drawing*, Bruce Publishing Co., Milwaukee
15. Svensen, *Drafting for Beginners*, McGraw-Hill, New York
16. Wells and Laubach, *Mechanical Drawing Test*, Manual Arts Press, Peoria
17. Wood, *Progressive Problems in Mechanical Drawing*, Mentzer Bush & Co., 31 East Tenth Street, New York

DRAWING EQUIPMENT FOR CLASS OF FIFTEEN

16 tables (or devices to use board on woodwork bench)
16 drawing boards 18″ x 24″
16 T-squares 24″
16 triangles 45° 6″, transparent
16 triangles 30° 60° 8″, transparent
16 triangular scales, 12″ architect's
(Extra set for demonstration by instructor)
1 irregular curve
1 blackboard compass
1 blueprint frame 16″ x 21″
1 washing tray 20″ x 24″
1 shears 10″ cutting edge (for trimming)
Fine sandpaper for pointing pencil
Tracing paper or cloth
Blueprint paper

This list provides for one class. On this basis it is necessary for successive classes to use the same equipment. It is better to provide a board, triangles, and architect's scale for each boy taking drawing.

Additional equipment, specified by the instructor, but usually furnished by the pupil:

Drawing instruments
Drawing paper
Thumb tacks
Pencils, eraser, and artgum
Lettering practice paper

WOODWORK

Introduction

This course is organized for a class meeting daily for nine weeks.

In examining this course of study some may wonder that a larger amount of space and emphasis is not given to woodwork. For a great many years woodwork has been the only form of shopwork given and many have come to feel that the terms industrial arts, or manual arts, or manual training, and woodwork are practically synonomous. This is not the case, and the modern school must give way to the modern theories regarding the industrial department and the part it plays in modern education. It is not our purpose to debate these theories, but rather to conform with those which have survived and have been accepted by the vast majority of educators.

In using this outline of woodwork keep in mind that the program is not a "self-starter" nor does it contain any "perpetual motion". It requires hard work and much sane thinking on the part of the teacher to carry out this outline and cover the material in the time allotted, but it CAN be done and IS being done by a number of schools. The series of instruction sheets suggested for this and the other outlines will require effort to work out, but the teacher will be amply repaid for his work in the form of increased efficiency and greater accomplishment.

It is advisable to adopt some good book as a text with enough copies so that each pupil may have one. In addition there should be a substantial reference library made up of magazines pertinent to the shop, and booklets, charts, etc., as put out by the various manufacturers. There should also be available the latest books appearing in the shop field. The publishers are daily announcing new books, and others not so new which are of great value.

There are two things, among others, which the teacher must never overlook: first, that in the eyes of the pupil and the parents the project is the foremost consideration; and second, that in the eyes of the teacher the project is of secondary importance when compared to the development of the boy. We must remember that we are teaching boys, not foot stools. It is very difficult to conform to both points of view, but the successful teacher is the one who is able to meet these double standards.

Specific Objectives

Skills or Abilities

1. To read blueprints, make list of materials, and estimate cost of project
2. To use correctly the layout tools; square, gauge, compass, pencil, knife, rule, straight edge

Knowledge

1. Blueprint reading

   Board measure

   Waste allowance

   Standard lumber grades and sizes

   Lumbering processes

Suggested Projects

1. Bread board (Two designs)
2. Book rack (Duplicate parts)
3. Shoe shining box (Duplicate parts)
4. Plant stand (Cross lap joint)
5. a. Footstool
   b. Costumer

Auxiliary Projects

6. Broom holder
7. Bird house
8. Glove box
9. Serving tray (Drawings in supplement)

Evidences of Mastery

1. The finished project
2. To read correctly a plan and take off a bill of material
3. To estimate cost of project
4. To know the standard lumber grades and sizes
5. To trace the lumbering process from the timber through the mill
6. To correctly use the layout tools in the laying out of a project
7. To know when to use the pencil and when to use the knife
8. To test a board for wind, squareness, and straightness
9. To know the steps in squaring up stock
10. To be able to use these steps successfully in squaring up stock
11. To know when to use the scratch gauge and when the pencil gauge
12. To know the principal parts of the plane
13. To be able to sharpen and adjust a plane
14. To know the cutting principle of the cross cut saw and the rip saw
15. To know how sizes of saws are indicated
16. To distinguish between the crosscut and rip saws
17. To saw to a line with both rip and crosscut saws
18. To know the proper use for the coping saw
19. To know what is meant by the set of a saw

Skills or Abilities	Knowledge
3. To sharpen, adjust, and use different types of planes in the making of projects	2. Use and care of the layout tools Proper methods of layout Knife *vs.* pencil as layout tools Tests for wind, straightness, and squareness
4. To care for and properly use the different kinds of saws in the making of projects	3. Various types of oilstones Grinding and whetting of edge tools Steps in squaring up stock a. Select face side and surface if necessary. Mark I b. Plane one EDGE straight and square, testing from face I. Mark this edge II c. Plane one END straight and square, testing from face I and edge II. Mark III d. Measure length from end III. Dress end opposite finished end, testing from face I and edge II. Mark IV e. Gauge width from edge II and dress to line, testing from face I and both ends f. Gauge thickness from face side and dress to line (On small blocks the order may be changed by the teacher to fit the problem) Scratch gauge *vs.* pencil gauge
5. To care for and properly use the boring tools in the construction of projects	4. Common saws: cross-cut, rip, back, coping, hack Cutting principles involved: knife and chisel action Correct position in sawing Saw filing through the use of practice blanks Knife line *vs.* pencil line for sawing
6. To correctly sharpen and use chisels, gauges, and carving tools in the construction of projects	5. Bits: auger and twist Braces: ratchet and plain Expansion bits Countersinks and screw driver bits
7. To fasten together materials by means of glue, nails, and screws	
8. To properly construct and use in the project the following joints: butt joint, half-lap, dowell, dado, mortise and tenon	
9. To properly prepare a surface for the finish	
10. To work irregular shapes accurately	

Evidences of Mastery

20. To be able to file crosscut and rip teeth practice blanks
21. To name the principal parts of an auger bit
22. To know how auger bit sizes are marked
23. To know how twist bit and drill sizes are marked
24. To drill through a board without splitting out the back
25. To be able to use ratchet brace in boring
26. To know when and how to use countersinks and screw driver bits
27. To know what drills to use in iron and how to lubricate them
28. To be able to sharpen chisels and gouges
29. To know what safety precautions must be observed in using chisels, gouges, and other edge tools
30. To know conditions which permit or require use of mallet
31. To know the advantages and disadvantages of each kind of glue
32. To be able to glue two boards together forming a satisfactory joint
33. To know what precautions are necessary in clamping glue joints
34. To know the systems of measuring screws and nails
35. To be able to layout and construct satisfactorily butt, half-lap dowell, dado, and mortise and tenon

Skills or Abilities	Knowledge
11. To apply the following finishing materials: stains, fillers, shellac, wax, varnish, lacquer, paint, enamel	Hand drills and push drills Drilling wood and iron
12. To recognize the common woods and determine best use for each	6. Grinding and honing of chisels, gouges, and carving tools Use of slip stones Kinds of chisels, etc. (Tang and firmer)
13. To properly apply common hardware such as locks, hinges, catches, casters, etc.	Cautions in use of mallet Safety precautions when using edge tools
14. To recognize and execute simple but good designs	7. Kinds of glue: animal, vegetable, and caseine Hot glue *vs.* cold glue Nails: kinds and sizes Clamps and hand screws Clamp nails, etc.
	8. Joint proportioning, cutting, and fitting
	9. Scrapers: How sharpened Sandpaper: kinds and grades Steel wool: grades Wood plugs Stick shellac Plastic wood
	10. Special tools: turning saw, spoke shave, draw knife
	11. Stains: acid, oil, spirit Paste fillers Shellac: white, orange Varnish: gloss, dull Paints, lacquer, enamel
	12. Woods and their characteristics Shrinkage and warpage
	13. Hinges: kinds, etc. Locks: kinds, etc. Trimmings: kinds, etc. Invisible hinges
	14. Rules of proportion, etc.

Evidences of Mastery

36. To know how tight a joint should fit before fastening
37. To know under what conditions each joint should be used
38. To properly prepare a surface "in the white" ready for the finishing materials
39. To know the differences between acid, oil, and spirit stains, and the advantages of each
40. To properly apply the stain chosen
41. To know when filler is necessary and what kind to use
42. To be able to apply shellac correctly
43. To be able to apply lacquer, varnish, and enamel
44. To know how to prepare and use crossgrained wood plugs
45. To know uses and limitations of plastic wood
46. To recognize six common cabinet woods
47. To recognize four common construction woods
48. To know how wood grows
49. To understand what is meant by shrinkage and warpage
50. To be able to apply common hardware such as locks, hinges, catches, casters, etc.
51. To know what constitutes good designs in the projects selected

REFERENCES

1. Adams, *Projects in Furniture Making,* Bruce Publishing Co., Milwaukee
2. Bast, *Essentials of Upholstery,* Bruce Publishing Co., Milwaukee
3. Baxter, *Boy Bird House Architecture,* Bruce Publishing Co., Milwaukee
4. Bedell, *Household Mechanics,* Manual Arts Press, Peoria
5. *Bill of Material Pads,* Manual Arts Press, Peoria
6. Blackburn, *Boy Activity Projects,* Manual Arts Press, Peoria
7. Brown and Tustison, *Job Sheets in Practical Woodwork,* Bruce Publishing Co., Milwaukee
8. Bryant, *Furniture Projects,* Manual Arts Press, Peoria
9. Bulletins on woods, etc., published by
   Southern Cypress Manufacturing Association, Jacksonville, Fla.
   California Redwood Association, 24 California St., San Francisco
   Hardwood Manufacturers' Institute, Memphis, Tenn.
   Western Pine Manufacturers' Association, Portland, Oreg.
   California White Pine Manufacturers' Association, 600 Call Building, San Francisco
10. Califf, *Permanent Bird Houses,* Bruce Publishing Co., Milwaukee
11. Charts on tools and joinery, Stanley Rule and Level Plant, New Britian, Conn.
12. Crawshaw, *Problems in Furniture Making,* Manual Arts Press, Peoria
13. De Vette, *One Hundred Problems in Woodworking,* Bruce Publishing Co., Milwaukee
14. Furniture catalogues
15. Greene, Workshop Notebooks, Manual Arts Press, Peoria
16. Griffith, *Essentials of Woodwork,* Manual Arts Press, Peoria
17. Griffith, *Woodwork for Secondary Schools,* Manual Arts Press, Peoria
18. Hardware and supply catalogues
19. Hjorth, *Principles of Woodworking,* Bruce Publishing Co., Milwaukee
20. *How to Work with Wood and Tools,* Stanley Rule and Level Plant, New Britian, Conn.
21. *Industrial Arts and Vocational Education Magazine,* Bruce Publishing Co., Milwaukee
22. *Industrial Education Magazine,* Manual Arts Press, Peoria
23. Jeffrey, *Wood Finishing,* Manual Arts Press, Peoria

24. Johnson, *Furniture Upholstery,* Manual Arts Press, Peoria

25. Klenke, *Joints and How They are Made,* Manual Arts Press, Peoria

26. La Voy, *Problems and Projects in Industrial Arts,* Manual Arts Press, Peoria

27. Madsen and Lukowitz, *Problems in Furniture Design and Construction,* Bruce Publishing Co., Milwaukee

28. McGee and Brown, *Instructional Units in Wood Finishing,* Bruce Publishing Co., Milwaukee

29. Murray, *Problems in Woodworking,* Manual Arts Press, Peoria

30. Newell, *Wood and Lumber,* Manual Arts Press, Peoria

31. Noyes, *Design and Construction in Wood,* Manual Arts Press, Peoria

32. Noyes, *Handwork in Wood,* Manual Arts Press, Peoria

33. Noyes, *Wood and Forest,* Manual Arts Press, Peoria

34. Perry, *Seat Weaving,* Manual Arts Press, Peoria

35. Siepert, *Bird Houses Boys Can Build,* Manual Arts Press, Peoria

36. Van Deusen, *Demonstrations in Woodwork,* Manual Arts Press, Peoria

37. Varnum, *Industrial Arts Design,* Manual Arts Press, Peoria

38. Wheeler, *A Manual of Woodworking,* G. P. Putnams' Sons, New York

39. Wise, *Elementary Woodworking Projects,* Manual Arts Press, Peoria

40. Woolley, *A Guide to Woodworking Projects,* Manual Arts Press, Peoria

41. Woolley, *Guide to Study of Woodworking,* Manual Arts Press, Peoria

42. Worst, *More Problems in Woodwork,* Bruce Publishing Co., Milwaukee

43. *Yates-American Instructor,* Yates-American Machine Company, Beloit, Wis.

Woodworking Equipment for a Class of Fifteen

15 benches, with good vises
1 grinder (electric preferred)
1 T-bevel
1 set auger bits ¼″ to 1″ by 16ths
1 each auger bits ¼″—⅜″—½″
4 braces, ratchet, 8″ sweep
1 brace, ratchet, 10″ sweep
3 countersinks, rose-head
1 expansive bit, ⅞″ to 3″
1 each screw driver bits ¼″—5/16″—⅜″
1 set twist drills, straight shank 1/16″ to ¼″
2 hand drills
15 bench brushes

1 glue pot, one quart (electric, with thermostat preferred)
1 glue brush 1″ round, with iron handle
1 dozen varnish brushes 1″, rubberset
1 dozen varnish brushes 1½″, rubberset
1 burnisher
1 set six carving tools
6 each chisels, socket firmer ¼″—⅜″—½″—¾″—1″
2 cold chisels ¾″
1 dozen adjustable clamps 36″
1 dozen hand screws 12″
3 dividers 8″
1 draw knife 7″
3 each cabinet files 8″ and 10″
3 wood files, flat 10″
6 crosscut saws, 9 point 22″
1 hack saw, adjustable
3 rip saws, 7 point 22″
1 saw set, pistol grip
1 turning saw 14″
1 miter box 24″ x 4″ saw
6 cabinet scrapers
3 each screw drivers 4″ 6″ 8″
1 tinners' snips 2½″ cut
4 spoke shaves, adjustable 10″
15 try-squares 6″
1 framing square 24″
1 set trammel points
1 machinists' vise, anvil face 3″ jaw
1 each, adjustable wrenches 6″ 8″ 10″
6 mill files, bastard cut 10″
6 slim taper files 5½″
2 file brushes
15 marking gauges
2 mortise gauges
2 each gouges, inside ground ¾″ and 1″
2 each gouges, outside ground ¾″ and 1″
12 hammers, claw 12 oz.
1 hammer, claw 16oz.
15 sloyd knives 3″ blade
6 mallets, hickory 3″ x 5″
3 each nail sets 1/16″ and 3/32″
3 oil cans
6 oil stones
1 gouge slip stone, medium 3″ x 2″ ⅜″ x ⅛″
1 pincers, carpenters' 8″
2 planes, block 6″ adjustable
15 jack planes 14″
1 dozen extra irons, double for jack planes
1 jointer plane

6 smooth planes 9″
2 pliers, round nose 5″
2 pliers, combination 6″
1 pliers, side cutting 6″
2 putty knives
15 rules 12″ (Steel preferred)
15 back saws 14 point 12″
1 compass saw 10″
6 coping saws with extra blades

Additional Desirable Equipment

1 combination plane
1 power band saw, portable 20″
1 power jointer, portable 6″
1 power saw bench, portable

PRACTICAL ELECTRICITY

Introduction

This course is organized for a class meeting daily for nine weeks.

Unlike other shop skills, electrical shop work cannot dissociate itself from fundamental electrical principles. The pupil, to gain some skill, must not only learn the use of the common electrician's tools, but he must also learn something of the reasons underlying certain procedures, or of the theory of circuits. In other words, the electrician's skill is made up of an inseparable combination of fundamental electrical principles and mechanical skill.

The pupil who constructs a bell-ringing transformer must operate it to see that it functions properly. If he is normal in his inquisitiveness he will want to know why it works as it does. In fact, he should know something of the theory of transformers in order to construct it intelligently.

The projects, or experiments, contained in the following outline are designed to teach fundamentals and their common application. For example, the principle of the electro-magnet is applied to the telegraph sounder (drawing furnished in supplement) paves the way for a general discussion of the application of this principle to the radio, the telephone, and to industry and business in general. Thus, it will be seen that the electrical course opens new channels of thought which have never been touched by many schools.

It is very difficult to select a text which will supply the material desired and the committee suggests that many reference books be used instead.

Specific Objectives

Skills or Abilities	Knowledge
1. To recognize the common wire sizes To be able to use a wire measuring gauge	1. The Brown and Sharpe gauge The wire table
2. To recognize the kinds of insulation on wires To name them	2. Annunciator, cotton and silk covered, rubber covered, weather proof, asbestos insulated, enamelled, and electrolier wires
3. To tin the soldering copper for use	3. Material needed Preparation of the copper for the tinning process Purpose of flux
4. To splice, solder, and tape joints To recognize types of joints	4. Kinds of joints Taping materials Methods of handling
5. To test and replace fuses	5. Construction and use of plug, link, and cartridge fuses
6. To set up appropriate combinations of battery cells in series or parallel for furnishing current to the best advantage	

Suggested Projects

1. Short lengths of common wire sizes in a box
   a. Report on sizes by use of gauge
   b. Report on additional set by inspection only
2. Report on above lengths of wire which are cut away to show character of insulation. Use sketches
3. Performance of the tinning operation
4. Make spliced joints with Nos. 18 and 14 wire. Solder and reinsulate joints to correspond to the original insulation
5. Using a regular testing hook-up, test a number of fuses, discarding defective ones and replacing them with good ones
6. Using voltmeter, several dry cells, car light bulb, and bells, test out voltage of several combinations of battery hook-ups and try out action of battery on lamp and bells with the different hook-ups
7. Dismantle and assemble push button and bell or buzzer
   Trace out and sketch the circuit
   Adjust vibrator contact
8. Install single bell circuit
9. Install bell with two push buttons on one power supply
10. Install two bells with one push button and power supply
    a. Two vibrating bells
    b. One vibrating and one series bell
11. Install two circuits of one bell and one push button each, using a single battery or power supply
12. Install a three-wire return call system
13. Construct a simple electro-magnet; apply it to some practical demonstration (See telegraph sounder in project supplement)
14. Dismantle and reassemble and test out a manufactured transformer,

Evidences of Mastery

1. To recognize common wire sizes
2. To recognize and name enamelled, cotton and silk covered, rubber covered, asbestos covered, and weather proof wire
3. To tin a soldering copper and solder a wire splice
4. To properly splice, solder, and reinsulate a broken wire
5. To identify, remove, and replace burned-out fuses
6. To wire a number of dry cells in series and parallel
7. To test battery combinations using voltmeter and ammeter
8. To know the principle of the fuse in the electric circuit
9. To know the principle of the dry cell
10. To name the parts of a dry cell and explain their functions
11. To know the principle of the electro-magnet
12. To diagram a simple electro-magnet
13. To know the application of the electro-magnet to the telephone and telegraph
14. To know how the push button or switch functions in an electric circuit
15. To repair and adjust a buzzer or bell
16. To diagram and wire several bell circuits
    a. One bell, one push button, one power source
    b. Two bells, one push button, one power source
    c. One bell, two push buttons, one power source
    d. Two bells, two push buttons, one power source
17. To know the principles of magnetism
18. To know the principle of the transformer

Skills or Abilities

7. To understand the construction of the electric bell and buzzer

8. To connect up the several common types of bell circuits (Ability to use the screw driver and pliers is assumed)

9. To recognize the inter-relationship of the electric current and magnetism

10. To know the construction of a bell-ringing transformer, and how it is used

11. To read a watt-hour or common electric light meter
To figure a light bill

12. To understand the construction and action of a telephone receiver

13. To understand the principle of the common lead storage battery; its charging, testing, and maintenance

14. To make use of the heating effect of resistance wire

15. To make proper connections from drop cord to socket and from drop cord to outlet or plug, including proper dissembly and reassembly of light socket

16. To wire up a lamp or similar device

17. To understand the several kinds of circuits involved in house-wiring
To connect up a simple crystal radio receiver

Knowledge

6. Effect of change of cell groupings on voltage and the current capacity

7. Action of an electro-magnet by means of automatic make and break current
Purpose of push button

8. Bell circuits
Appropriate batteries
Manner of fastening bell wires

9. Magnets of soft iron; magnet wire
Effect of hardness in the iron
Effect of changing strength of magnetizing current
Effect of varying the number of turns of wire

10. Electro-magnetic induction
Transformer circuits

11. Meaning of watt-hour. How to figure energy used

12. Telephone receiver parts
Purpose of soft iron pole pieces and diaphram

13. Chemical action of the storage battery
Uses of the storage battery
Limitations of the storage battery

14. Resistance wire
Expansion of metals
Heat-resisting insulation

15. Description of drop cord, plug, and outlet, and socket mechanisms

16. Fixture wire; bushings; boring holes in base; special fixture parts; manner of assembly

17. House wire sizes used
Carrying capacity of wires of different sizes
Porcelain knobs, tubes, and cleats
Switches of various types; outlets
Wiring code
Three-point switches and their use in two-point control
Crystal detectors, coils, switches, condensers

Suggested Projects

or construct and test a transformer of local design

15. Have pupils read meter at home or at school and figure bills

16. Dissemble a telephone receiver; sketch mechanical details and wiring circuit

Connect up two receivers, each directly to opposite ends of drop cord wire at least 50 ft. long and attempt a conversation

17. Connect up six-volt storage battery to a liquid or bulb rectifier, or other charging source

Make tests of voltage, liquid level, and condition of charge

18. Construct and test a thermo sign flasher

19. Construct and test an electric toaster heat element

20. Connect up drop cord to ceiling outlet and key socket, and test

21. Wire up a table lamp

22. Connect up single light through single pole switch

23. Wire a closet light with door jamb switch

24. Wire lights in parallel using one switch

25. Connect lamps for Christmas tree lighting

26. Wire two lamps or other appliances to power through double-branched cut-outs

27. Wire a lamp with two-point switch control (This is used in stairways)

28. Assemble a crystal receiver and test (Use some plan suggested in the reference books)

Evidences of Mastery

19. To insert a bell ringing transformer in a circuit
20. To read a watt-hour meter and figure a light bill
21. To figure cost of operation of a heating device when the consumption rate is given
22. To know the construction and action of a telephone
23. To know the difference between D. C. and A. C. current
24. To know how electrical energy is stored in a storage battery
25. To know the principles involved in electrical storage
26. To know composition and purpose of electrolyte
27. To care for a storage battery
28. To test a storage battery
29. To connect up battery to charger
30. To know what makes resistance wire heat up
31. To measure electrical resistance of a wire
32. To know how heater wire must be insulated
33. To know several industrial uses of electrical heat
34. To wire up a socket and plug as used in an extension cord or lamp
35. To know the sizes and kinds of wire, kinds of insulating materials, etc. as applied to house wiring
36. To recognize various types of switches used in house wiring
37. To properly wire a light circuit in parallel
38. To know conditions under which a series circuit is used
39. To wire three-way switches in two-point control
40. To construct a simple radio using some standard circuit

REFERENCES

1. *An Electrical Wiring Specification,* Bryant Electric Co., Chicago
2. Baxter, *Electro-Craft,* Bruce Publishing Co., Milwaukee
3. Burling, *Preparatory Electricity,* Bruce Publishing Co., Milwaukee
4. Burling, *Elementary Electric Wiring,* Bruce Publishing Co., Milwaukee
5. Cook, *Interior Wiring,* John Wiley and Sons, 440 Fourth Avenue, New York
6. *Electric Wires and Cable,* American Steel and Wire Company, 208 S. La Salle Street, Chicago
7. High school physics texts
8. *Home of Ideas,* Bryant Electric Co., Chicago
9. *Industry's Electrical Progress,* Cutler-Hammer Manufacturing Co., 1266 St., Paul Avenue, Milwaukee
10. *National Electrical Code, Board of Fire Underwriters,* Underwriters' Laboratories, 207 East Ohio St., Chicago
11. Perry and Buck, *Practical Problems in Electrical Construction,* Bruce Publishing Co., Milwaukee
12. *Standard Wiring Symbols for Buildings,* Bryant Electric Co., Chicago
13. Tustison, *Home Mechanics,* Job Sheet No. 33, Bruce Publishing Co., Milwaukee
14. Tustison, *Job Sheets for the Practical Electrical Shop,* Bruce Publishing Co., Milwaukee
15. Weber, *Job Instruction Sheets on Practical Electricity,* John Wiley & Sons, New York
16. Willoughby, *House Wiring,* Manual Arts Press, Peoria
17. Willoughby, *Lesson Sheets in Elementary Electricity,* Manual Arts Press, Peoria
18. Willoughby, *Essentials of Electrical Work,* Manual Arts Press, Peoria
19. Willoughby, *Fundamentals of House Wiring,* Manual Arts Press, Peoria
20. Willoughby, *Practical Electricity for Beginners,* Manual Arts Press, Peoria
21. Willoughby, *Elementary Electricity,* Manual Arts Press, Peoria
22. Willoughby, *Problems in Electrical Work,* Manual Arts Press, Peoria

ELECTRICAL EQUIPMENT FOR CLASS OF FIFTEEN

6 pliers, electricians' side cutting 7″
6 pliers, long nose, side cutting 5″
6 screw drivers, cabinet makers' type ¼″ blade

6 screw drivers, cabinet makers' type, 9/64" blade (for light work)
6 small alcohol torches
6 rules 24"
6 knives
3 hack saw frames, with blades
4 soldering coppers (electric with interchangeable tips preferred)
3 cold chisels ⅝"
1 gasoline blow torch
2 tin shears 2½" cut
3 copper wire gauges, Brown and Sharpe
3 small D. C. voltmeters, moving coil type, double scale, 0-3, and 0-15 volts
3 small D. C. ammeters, moving coil type, 0-15 amperes
3 A. C. ammeters, iron vane type, 15 ampere scale
1 A. C. voltmeter, iron vane type, 150 volt scale
1 induction watt-hour meter, 10 ampere capacity
1 dozen dry cells 1½ volts
1 dozen electric bells, double pole
½ dozen electric buzzers
1 dozen push buttons
6 small bell ringing transformers
2 common telephone receivers
1 storage battery 6 volt
2 dozen key sockets, with insulating bushings
2 dozen attachment plugs
2 dozen snap switches, single pole
4 snap switches, three point
3 door jam switches
2 blocks, solid sal ammoniac for cleaning soldering coppers
1 lb. soldering paste
3 lbs. wire solder, rosin core

SUPPLIES

Wire of various sizes and kinds as indicated in the outline
Fuses, plug and cartridge type, as indicated
½ Gallon insulating varnish
Materials for projects listed as determined by the project and the number in the class
(The above list is purely suggestive and is in addition to the usual list of woodworking tools)

METAL WORK

Introduction

This course is organized for a class meeting daily for nine weeks.

Metal work of the nature suggested here is quite new and therefore not generally understood. It is intended that the subject be taught in the woodwork shop where much of the regular equipment may be used. This outline deals entirely with iron or mild steel in the cold state and there is little need of equipment for heating the material. There are available various jigs for forming more ornate projects, but this elementary course is confined to projects which may readily be formed by hand.

It is the purpose of this course to introduce the pupil to the possibilities of the vast field of metal work and to have him develop certain fundamental skills which are involved in all types of iron and steel. The use and care of metal working tools is also presented. Reference material is somewhat limited but all indications point to many new publications in the near future. The projects suggested have a very strong appeal to the modern boy and he should be encouraged to experiment.

Through demonstrations, discussions, and field trips to blacksmith establishments the teacher will present to the pupils the processes, materials, and tools as called for in the outline.

Specific Objectives

Skills or Abilities

1. To use correctly the layout tools for metal work—rule, scriber, square, divider, center punch
2. To use correctly the metal cutting tools—hack saw, cold chisel, file
3. To use correctly the metal boring tools—drills, counter sinks
4. To use hammer correctly for setting a rivet
   To use a rivet set correctly
5. To be able to properly bend iron, hot or cold, using the vise, anvil, or jigs
6. To properly execute the finishing operations—cleaning sharpening, handling, grinding

Knowledge

1. Cost estimated by weight
   Interpretation of drawing
   Care of scriber and center punch
   Safety precautions
   Manufacture of iron and steel
2. Types of saw blades; number of teeth
   Tempering of cold chisels
   Grinding of cold chisels
   Kinds of files, bastard and smooth cut
3. Sharpening of twist drills
   Use of center punch as a guide for drilling
   Use of twist drill of large size as counter sink

Suggested Projects

1. Campfire grate

2. Foot scraper
   a. With brush
   b. Without brush

3. Sidewalk scraper or hoe

4. Garden trowel or dandelion digger

5. Folding camp stool or bicycle rack

(Drawings in supplement)

Evidences of Mastery

1. To estimate cost of each project
2. To measure and lay out work accurately as indicated on the plans
3. To know and to follow the safety precautions necessary in the shop
4. To select and properly use the correct cutting tool for each operation
5. To explain the principles involved in the tempering of tools
6. To use the ballpein hammer in simple forming operations
7. To properly head up a rivet, using hammer and set
8. To clean a project and finish with lacquer
9. To select proper drills and use in boring holes as indicated on plans
10. To draw-file with a reasonable degree of accuracy
11. To understand the steps in making steel from the mining of the ore to the rolling of the bars
12. To know the difference between iron and steel
13. To know what pig iron is
14. To use these skills and apply this information in the construction of a useful project
15. The finished project

Knowledge

4. Kinds of rivets, flat head, round head
   Rivet materials, soft iron, mild steel
   Hot-driven rivets tighter than cold-driven rivets

5. Hot bending *vs.* cold bending
   Bending limitations of hot and cold iron

6. Use of file, emery cloth, wire brush, and cleaning solutions in the finish of a project
   Shaping with file or grinder
   Handling, use of ferrules

REFERENCES

1. *Armco Ingot Iron,* American Rolling Mill Company, Middletown, Ohio
2. Berg and Wing, *Essentials of Metalworking,* Manual Arts Press, Peoria
3. Bollinger, *Elementary Wrought Iron,* Bruce Publishing Co., Milwaukee
4. *File Facts,* Simonds Saw Company, Fitchburg, Mass.
5. Grayshon, *General Metal Work,* D. Van Nostrand Company, 250 Fourth Ave., New York
6. *Hacksawology,* Simonds Saw Co., Fitchburg, Mass.
7. *Handbook for Drillers,* Cleveland Twist Drill Co., Cleveland
8. *Handy Chart,* Cleveland Twist Drill Company, Cleveland
9. *Making Steel, Briefly and Simply Told,* Inland Steel Company, First National Bank Bldg., Chicago
10. Peterson, *One Hundred One Metalworking Projects,* Bruce Publishing Co., Milwaukee
11. *The Story of Steel,* U. S. Steel Corporation, 71 Broadway, New York

METALWORK EQUIPMENT FOR CLASS OF FIFTEEN

(This equipment is to be used on the woodwork benches, and is in addition to the tools specified for woodwork. In case shops are separated there must be some duplication of woodwork equipment.)

Necessary Equipment

1 anvil 75 pounds
1 blowtorch one-quart size
3 hand drills

6 hack saws
1 bench grinder (power preferred)
4 machinist's vises 4″ jaw
6 cold chisels ⅝″
6 cold chisels ¾″
12 ballpein hammers 16 oz.
6 center punches
6 pliers, combination
6 pliers, side cutting
1 tin snips 3″ cut
2 soldering coppers 1 pound
emery cloth
files

Desirable Equipment

1 electric drill
1 blacksmith's post drill set of drills to one inch

BIBLIOGRAPHY

Bawden, W. T., *Standards of Eighth-Grade Attainment in Shop Work,* Industrial Education Circular 18, U. S. Government Printing Office, Washington, D. C.

Bawden, W. T., *Problems of Organization in Industrial Education,* Industrial Arts Circular 12, U. S. Government Printing Office, Washington, D. C.

Bennett, C. A., *The Manual Arts—History of Manual and Industrial Education up to 1870,* Manual Arts Press, Peoria

Bowman, C. A., and Tustison, F. E., *The Lesson Plan, Job Sheets, and Graphic Aids,* Bruce Publishing Company, Milwaukee

School Shop Annual (Current Year), Bruce Publishing Co., Milwaukee

Castle, D. W., *Mechanical Drawing Test,* Manual Arts Press, Peoria

Challman, S. A., *Rooms and Equipment for Industrial Arts,* Bruce Publishing Co., Milwaukee

Dean, Arthur, *Just between Ourselves,* Manual Arts Press, Peoria

Edgerton, A. H., *Industrial Arts in our Elementary Schools,* Manual Arts Press, Peoria

Edgerton, A. H., *Industrial Arts and Prevocational Education in Junior High Schools,* Bruce Publishing Co., Milwaukee

Friese, J. F., *Exploring the Manual Arts,* The Century Co., Chicago

Friese, J. F., *Manual Arts in the Junior High School,* Board of Education, St. Cloud, Minnesota

Greene, L. S., *School Shop Installation and Maintenance,* Manual Arts Press, Peoria

Greene, L. S., *Supervision of Special Subjects,* Bruce Publishing Co., Milwaukee

Griffith, I. S., *Teaching Manual and Industrial Arts,* Manual Arts Press, Peoria

Haynes, M. W., *Teaching Shop Work,* Ginn and Company, Chicago

Hunter, W. L., *Shop Tests,* Manual Arts Press, Peoria

Industrial Arts Magazine, Bruce Publishing Co., Milwaukee

Industrial Education Magazine, Manual Arts Press, Peoria

Koos, L. V., *The Junior High School,* Ginn and Company, Chicago

Lancelot, W. H., *Handbook of Teaching Skills,* John Wiley & Sons, New York

MacCreary, M., *Brain Stuffers* (A Play), Manual Arts Press, Peoria

Mayes, A. B., *Determining Factors in the Evolution of Industrial Arts in America*, Bruce Publishing Co., Milwaukee

McCall, W. A., *How to Measure in Education*, The Macmillan Company, Chicago

Nash, H. B., and Van Duzee, R. R., *Standard Woodwork Test-Standard Mechanical Drawing Test*, Bruce Publishing Co., Milwaukee

Newkirk, L. V., *Course of Study in Practical Mechanics*, Extension Bulletin, College of Education, Series No. 21, State University of Iowa, Iowa City

Newkirk, L. V. and Stoddard, G. D., *The General Shop*, Manual Arts Press, Peoria

Profitt, M. M., *Values of the Manual Arts*, Industrial Education Circular, 27, U. S. Government Printing Office, Washington, D. C.

Roberts, W. E., *Manual Arts in the Junior High School*, U. S. Bureau of Education Bulletin 1924, No. 11, Government Printing Office, Washington, D. C.

Ruch, G. M., *Improvement of the Written Examination*, Scott, Foresman and Co., Chicago

Schweickhard, D. M., *Industrial Arts in Education*, Manual Arts Press, Peoria

Selvidge, R. W., *Individual Instruction Sheets*, Manual Arts Press, Peoria

Selvidge, R. W., and Allton, J. M., *Blacksmithing*, Manual Arts Press, Peoria

Selvidge, R. W., and Castle, D. W., *Blueprint Reading*, Manual Arts Press, Peoria

Selvidge, R. W. and Christy, E. W., *Sheetmetal Work*, Manual Arts Press, Peoria

Smith, H. J., *Teaching Aids for the Asking*, University of Minnesota Press, Minneapolis

Snedden and Warner, *Reconstruction of Industrial Arts Courses*, Columbia University Press, New York

Vaughn, S. J., and Mays, A. B., *Content and Methods of Industrial Arts*, The Century Co., Chicago

Wells, G. K., *Standardized Woodwork Test*, Manual Arts Press, Peoria

PROJECT SUPPLEMENT

(Blueprints may be made directly
from these tracings)

• MATERIAL REQUIRED •

1 Pc $\frac{1}{16}$" x 4" x $6\frac{3}{8}$" STEEL •

1 Pc $\frac{3}{8}$" ROD IRON $5\frac{1}{2}$ LONG

2 - $\frac{3}{16}$" x $\frac{1}{2}$" C.S.H. IRON RIVETS •

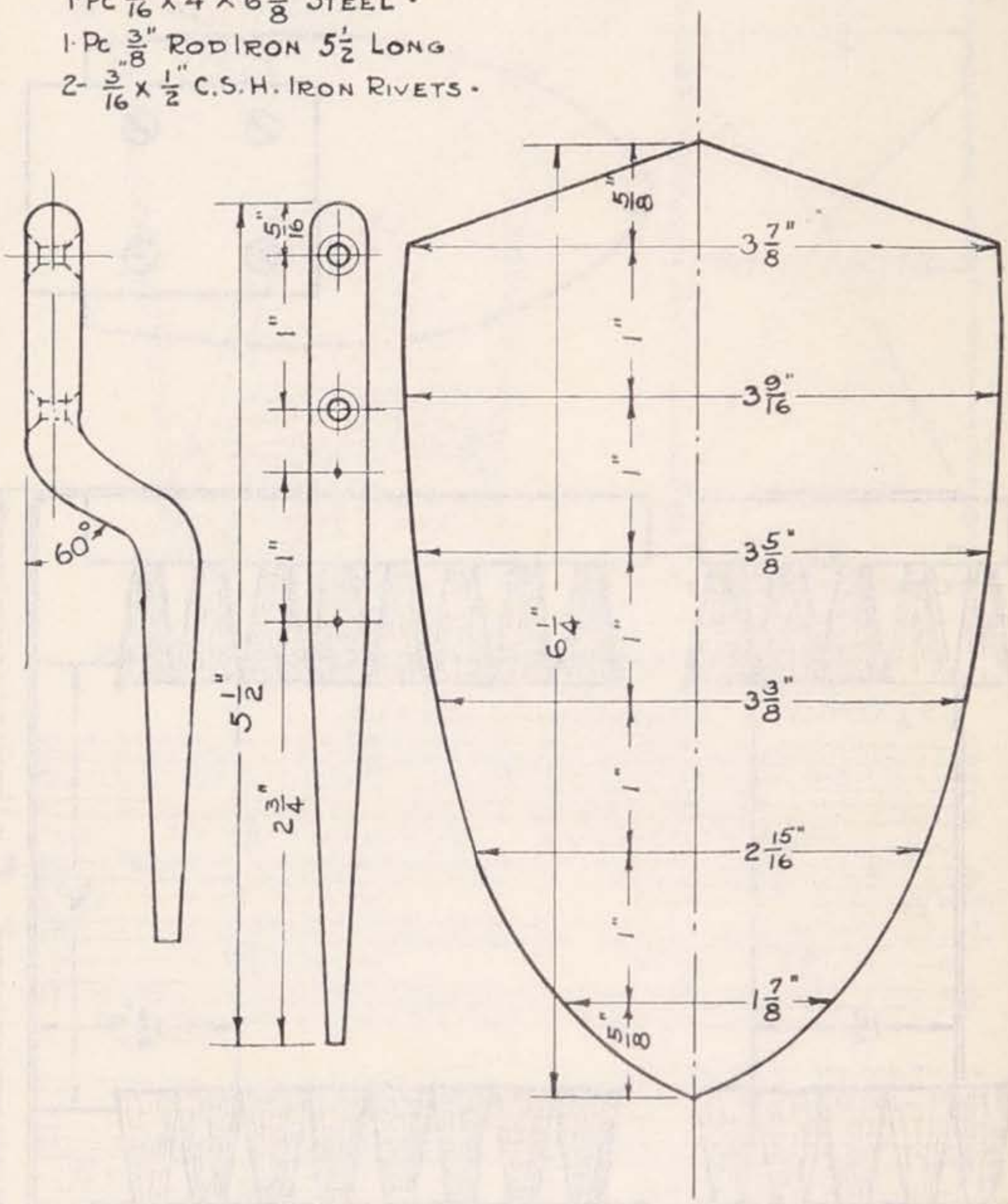

• GARDEN TROWEL •

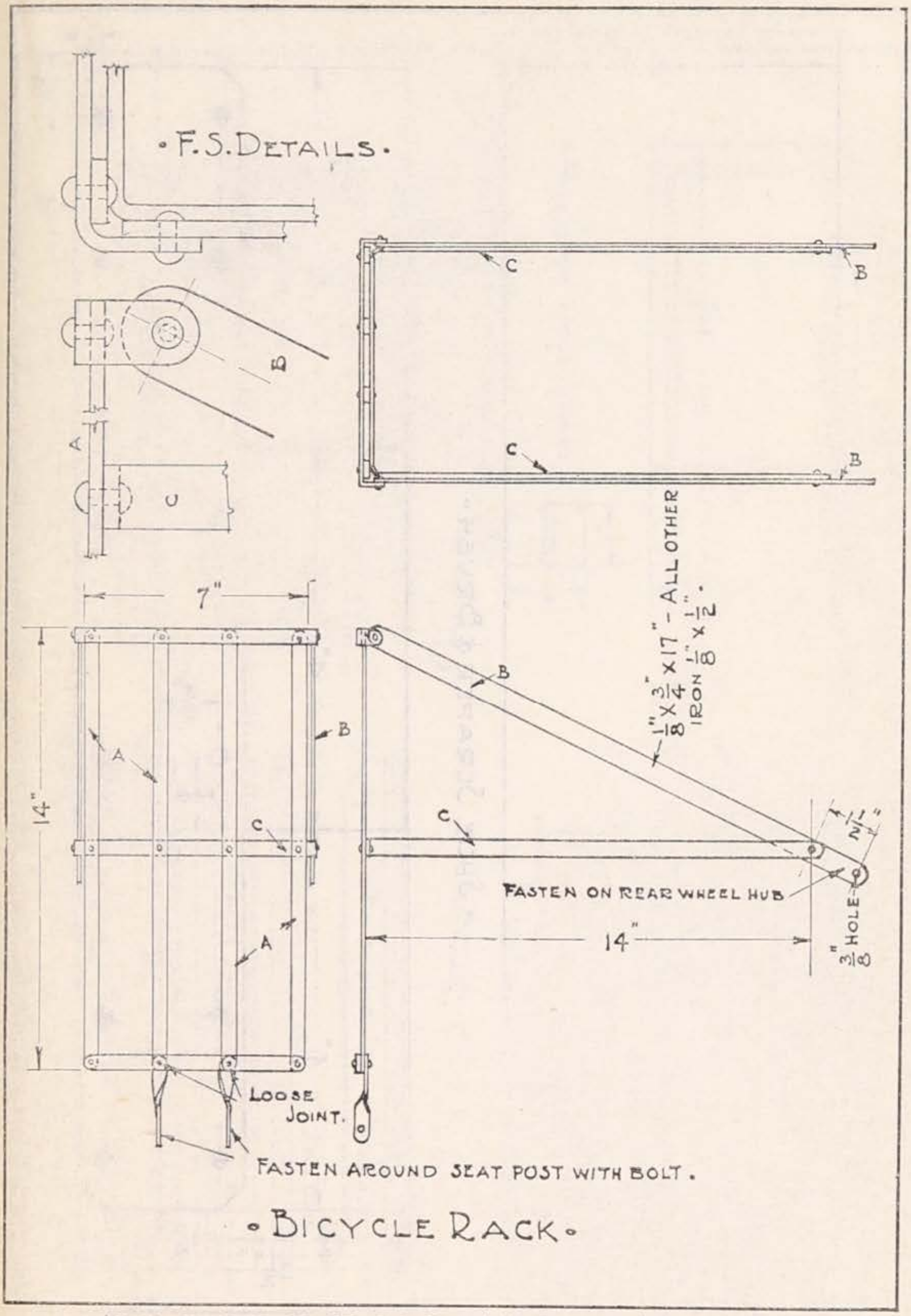
F.S. DETAILS.
A
B
C
7"
14"
LOOSE JOINT.
FASTEN AROUND SEAT POST WITH BOLT.
1/8" X 3/4" X 17" - ALL OTHER IRON 1/8" X 1/2"
FASTEN ON REAR WHEEL HUB
14"
3/8" HOLE
BICYCLE RACK.

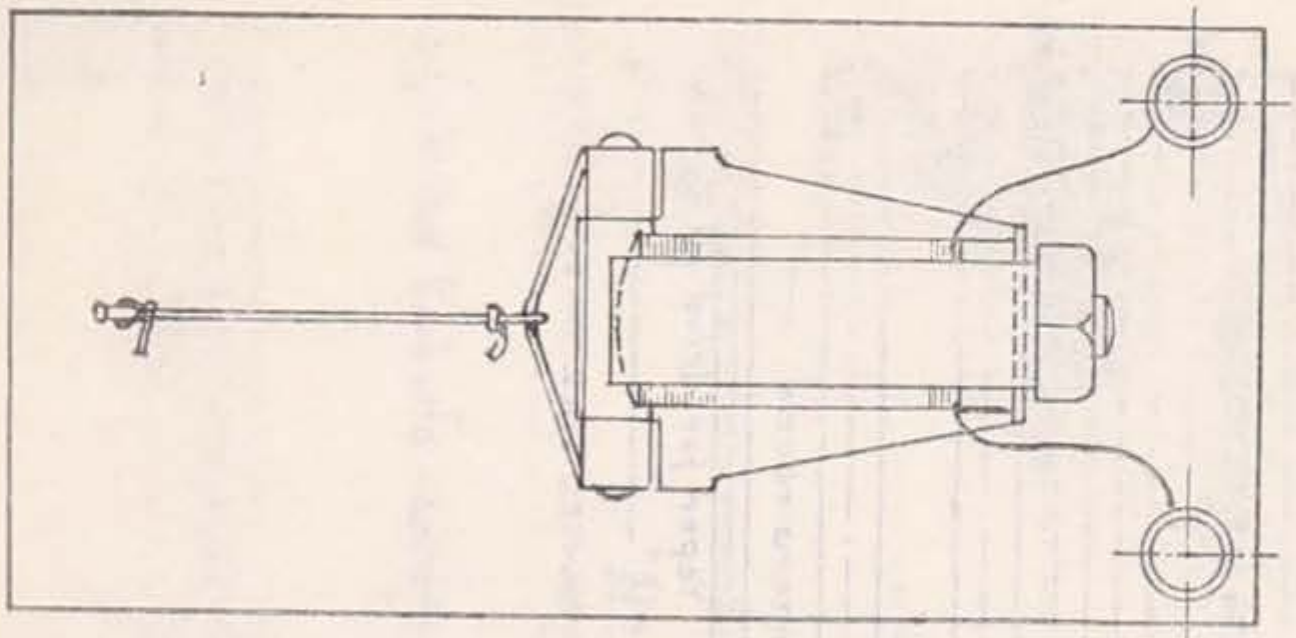

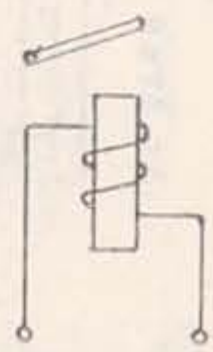

FIG. 2

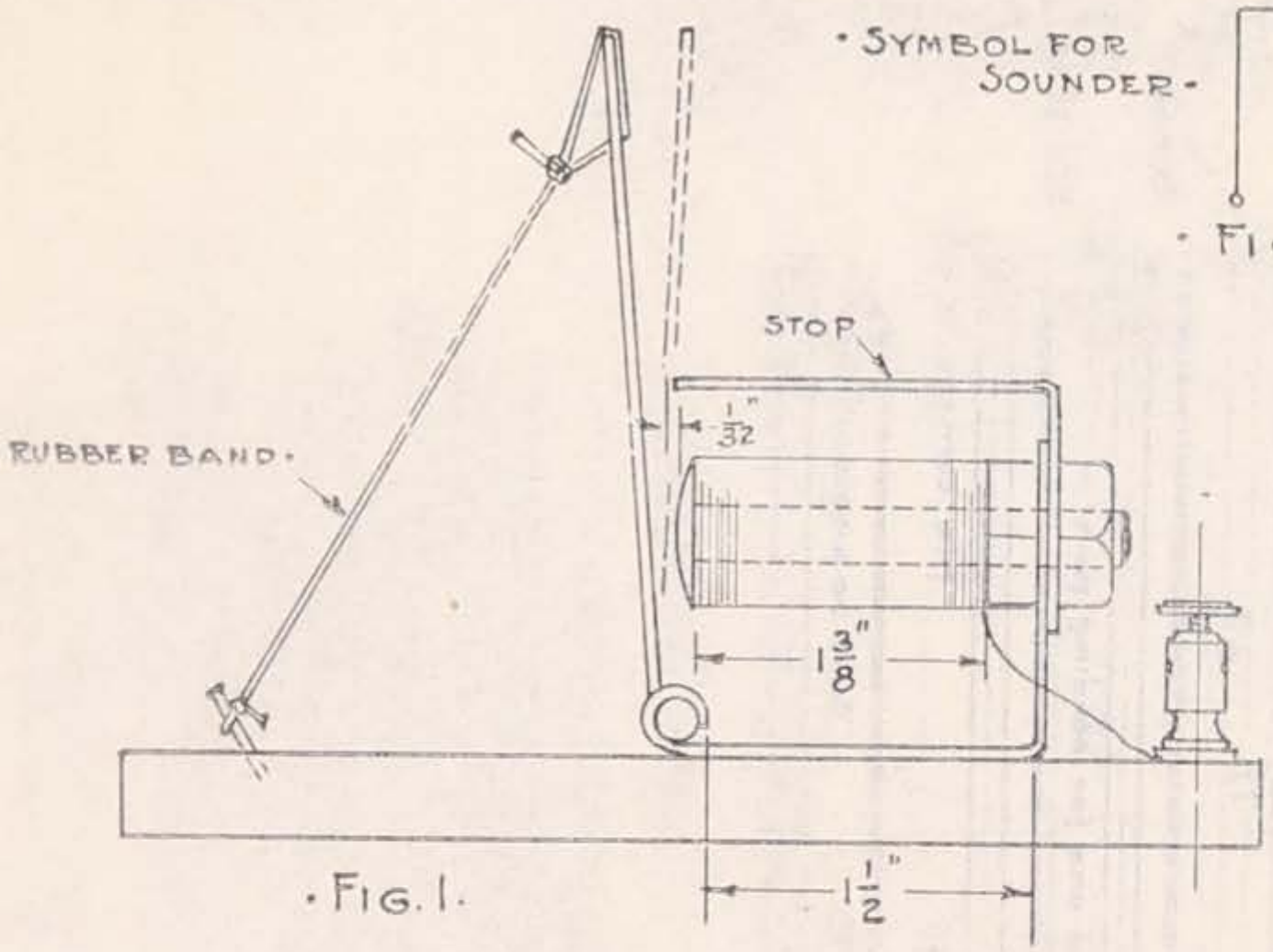

FIG. 1

ELECTROMAGNETS
TELEGRAPH SOUNDER

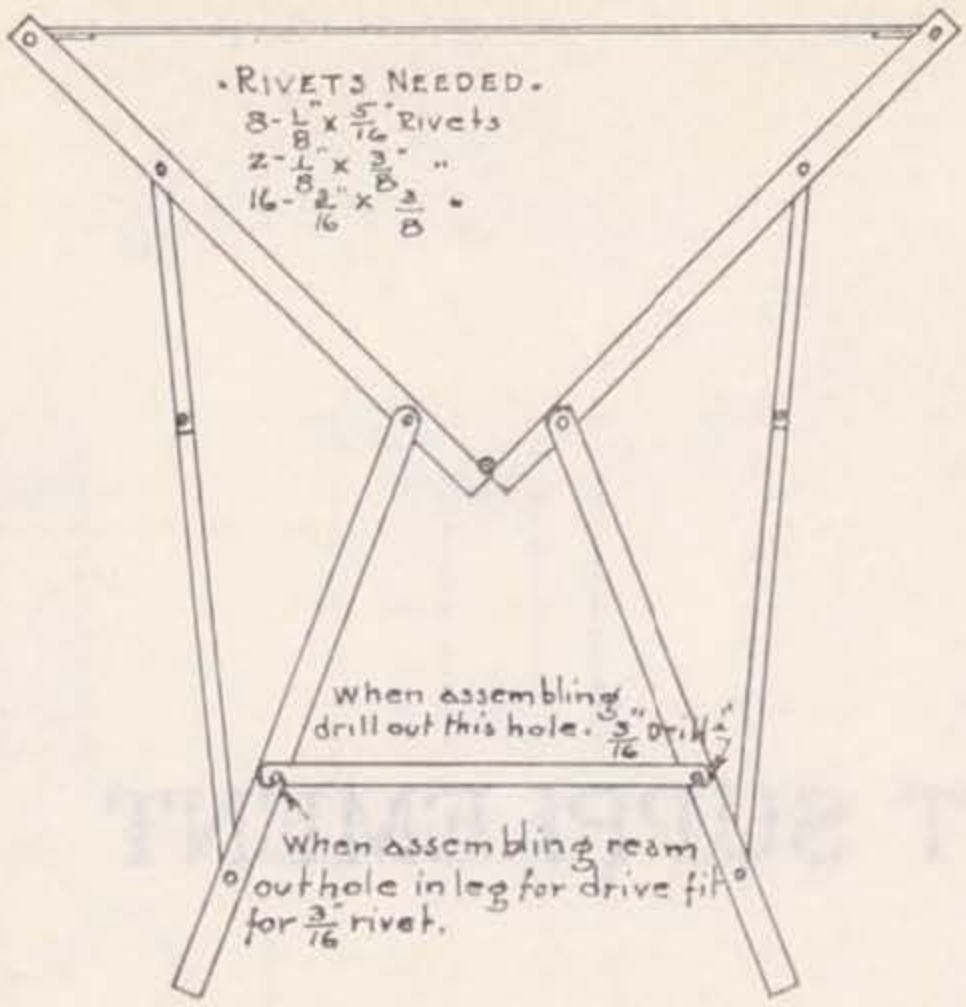

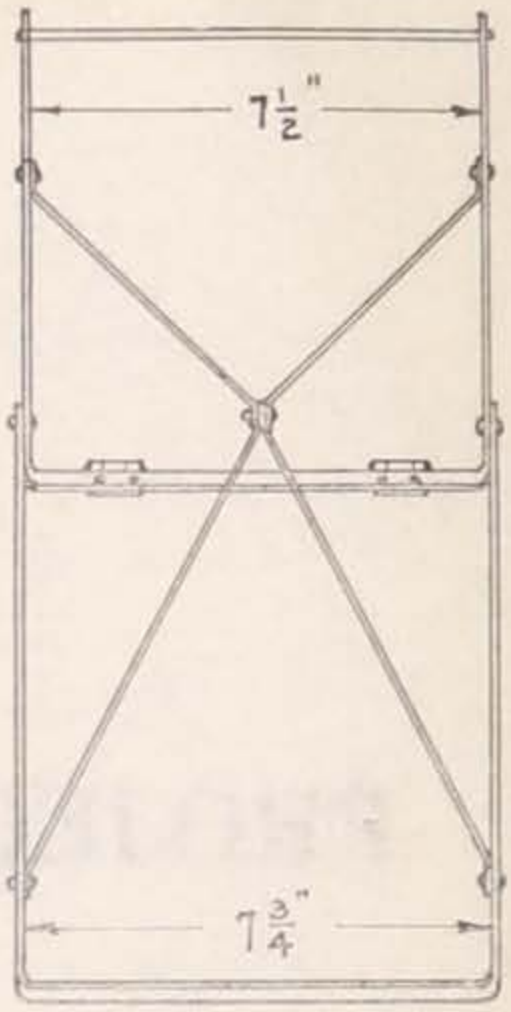

STEPS FOR UPPER & LOWER PIECE AS NUMBERED. 2-Each wanted

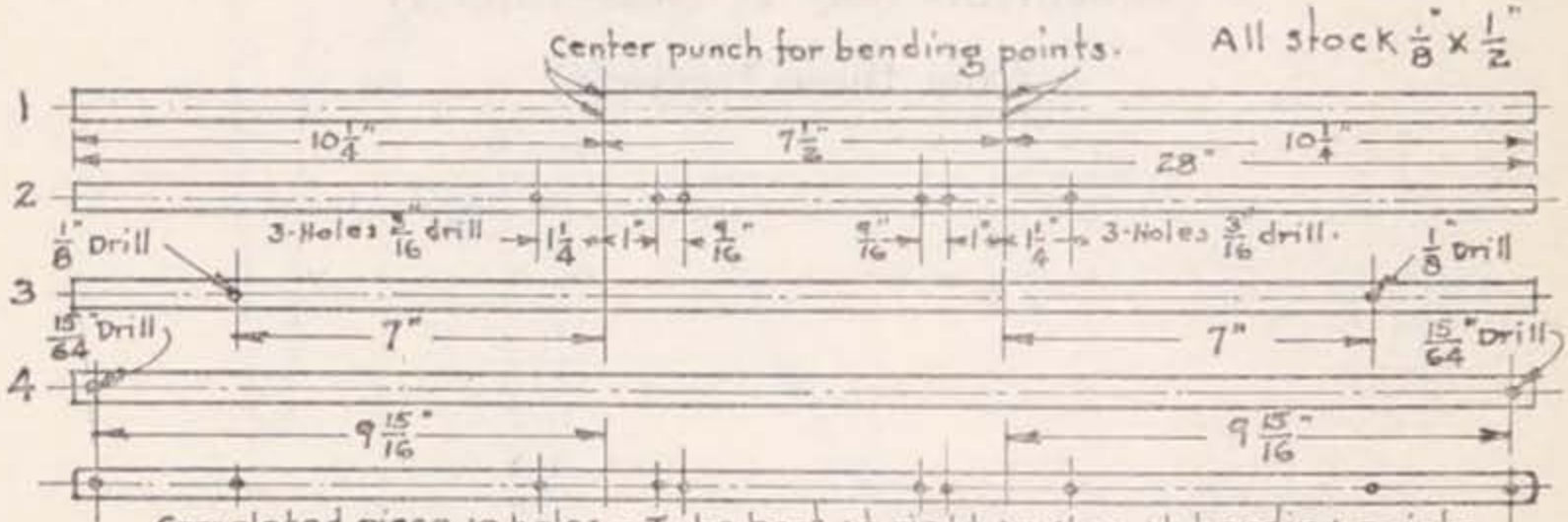

Completed piece 10 holes – To be bent at right angles at bending points indicated.

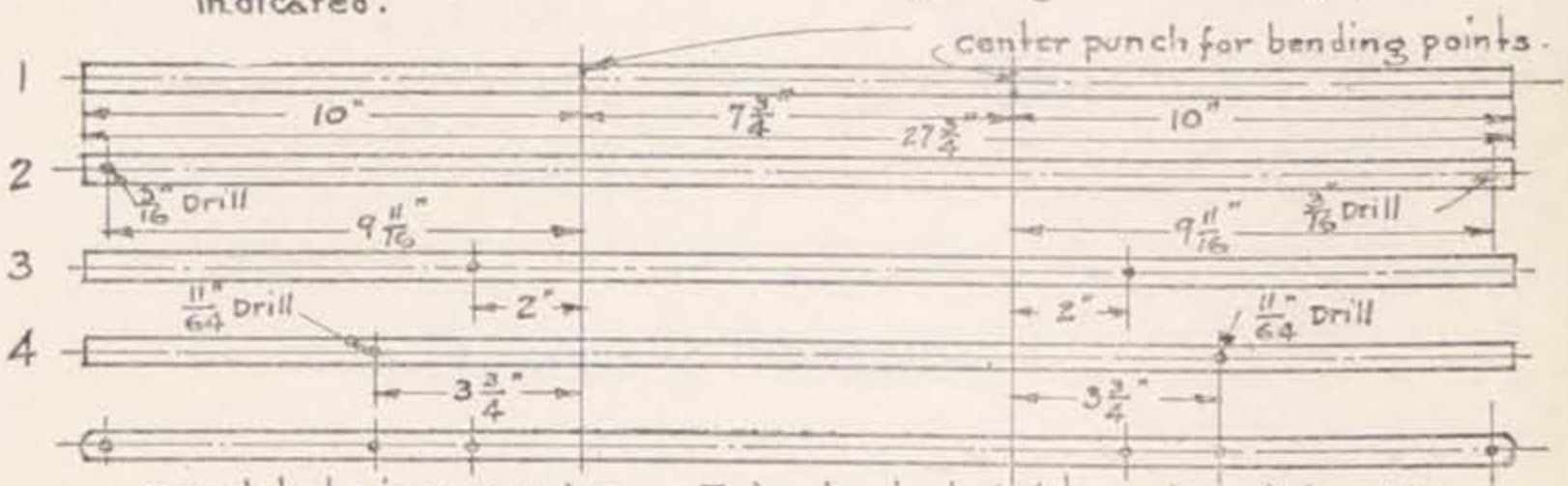

Completed piece 6 Holes — To be bent at right angles at bending points indicated.

·CAMP STOOL·

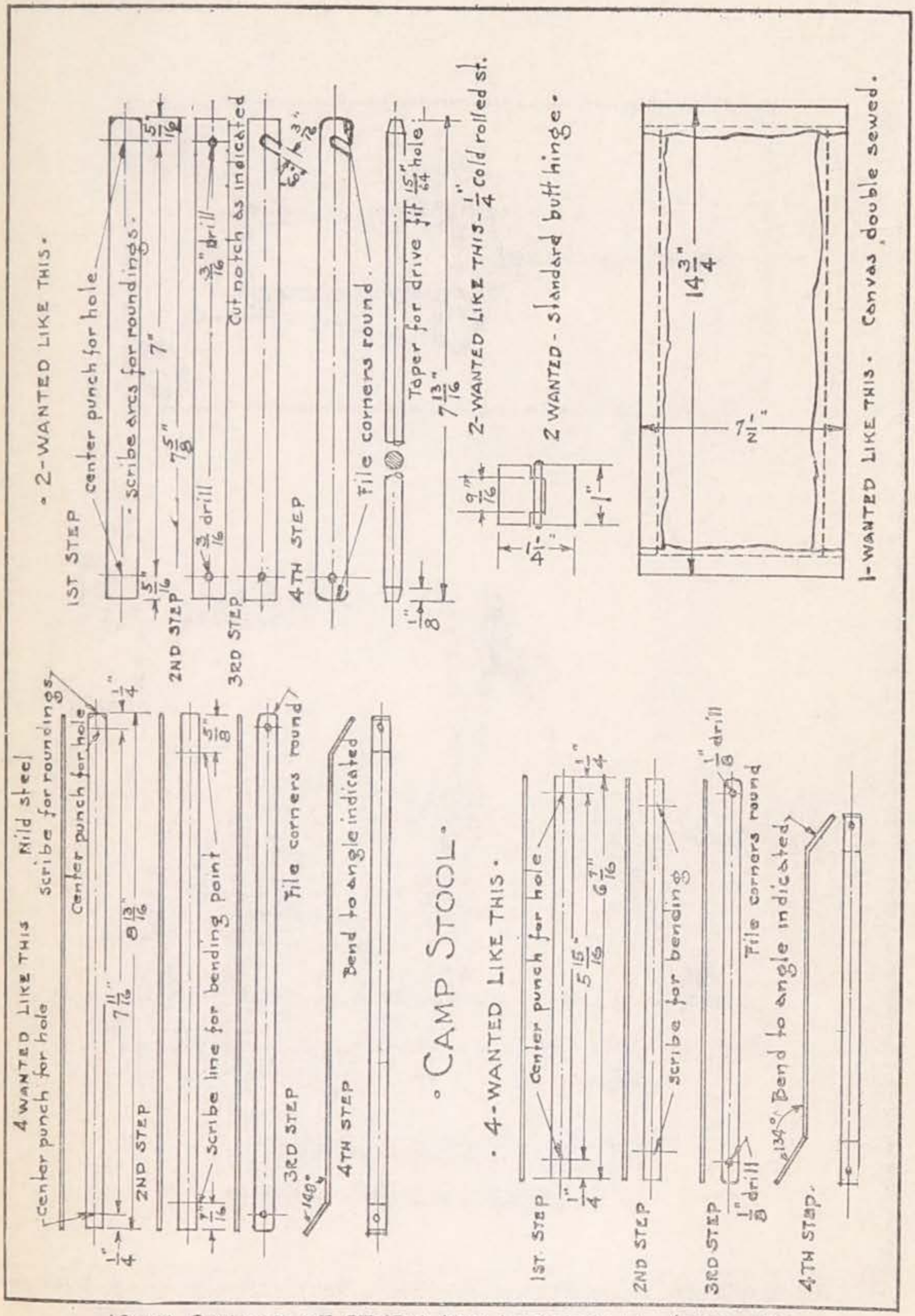
• CAMP STOOL •
• 4-WANTED LIKE THIS •
1ST STEP
2ND STEP
3RD STEP
4TH STEP
Center punch for hole
Scribe for bending
File corners round
Bend to angle indicated
134°
1/8" drill
4 WANTED LIKE THIS
Mild steel
Center punch for hole
Scribe for roundings
Scribe line for bending point
File corners round
Bend to angle indicated
140°
• 2-WANTED LIKE THIS •
Center punch for hole
Scribe arcs for roundings
3/16" drill
Cut notch as indicated
File corners round
Taper for drive fit 15/64" hole
2-WANTED LIKE THIS - 1/4" cold rolled st.
2 WANTED - standard butt hinge
1-WANTED LIKE THIS. Canvas double sewed.

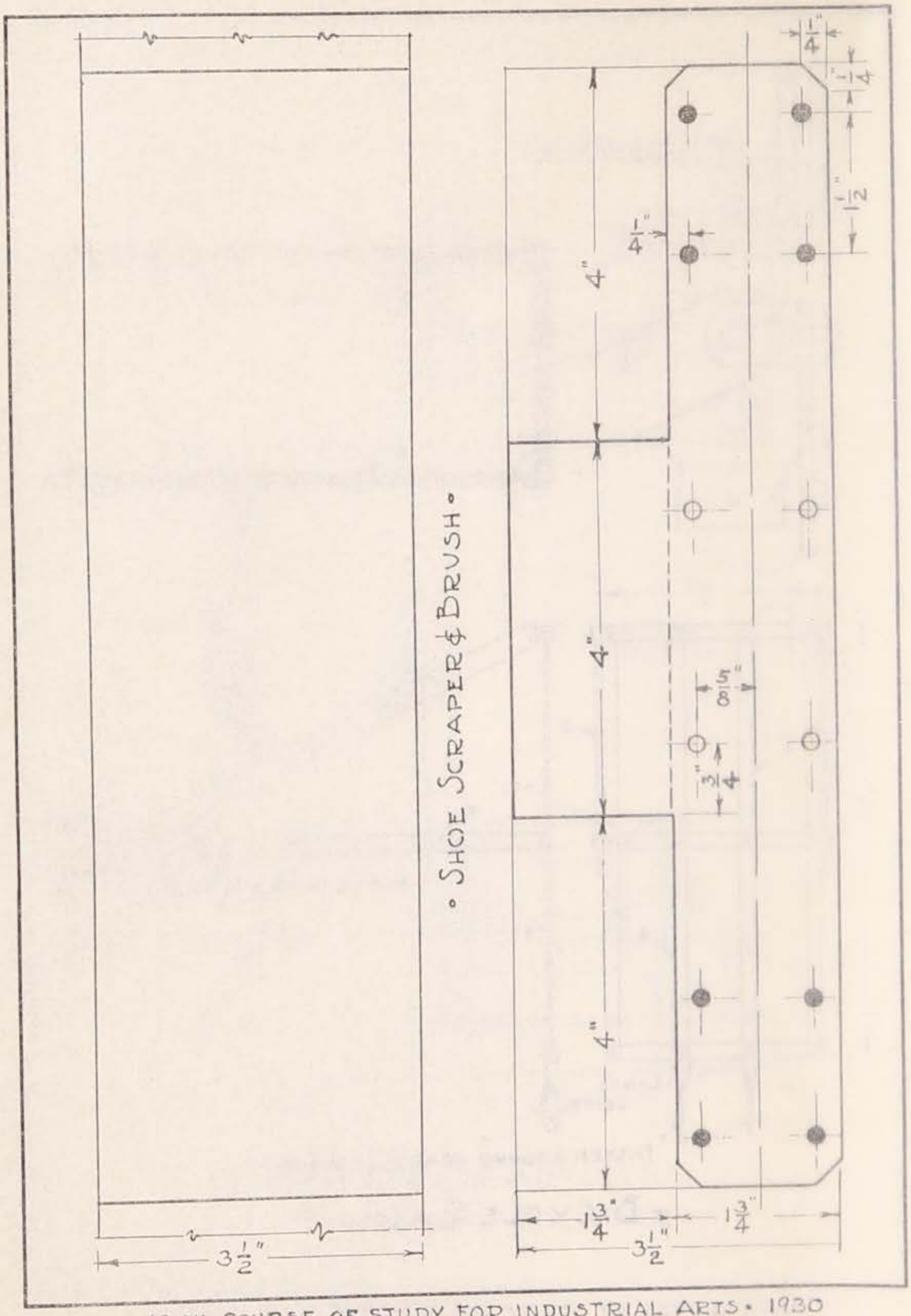

IOWA COURSE OF STUDY FOR INDUSTRIAL ARTS • 1930

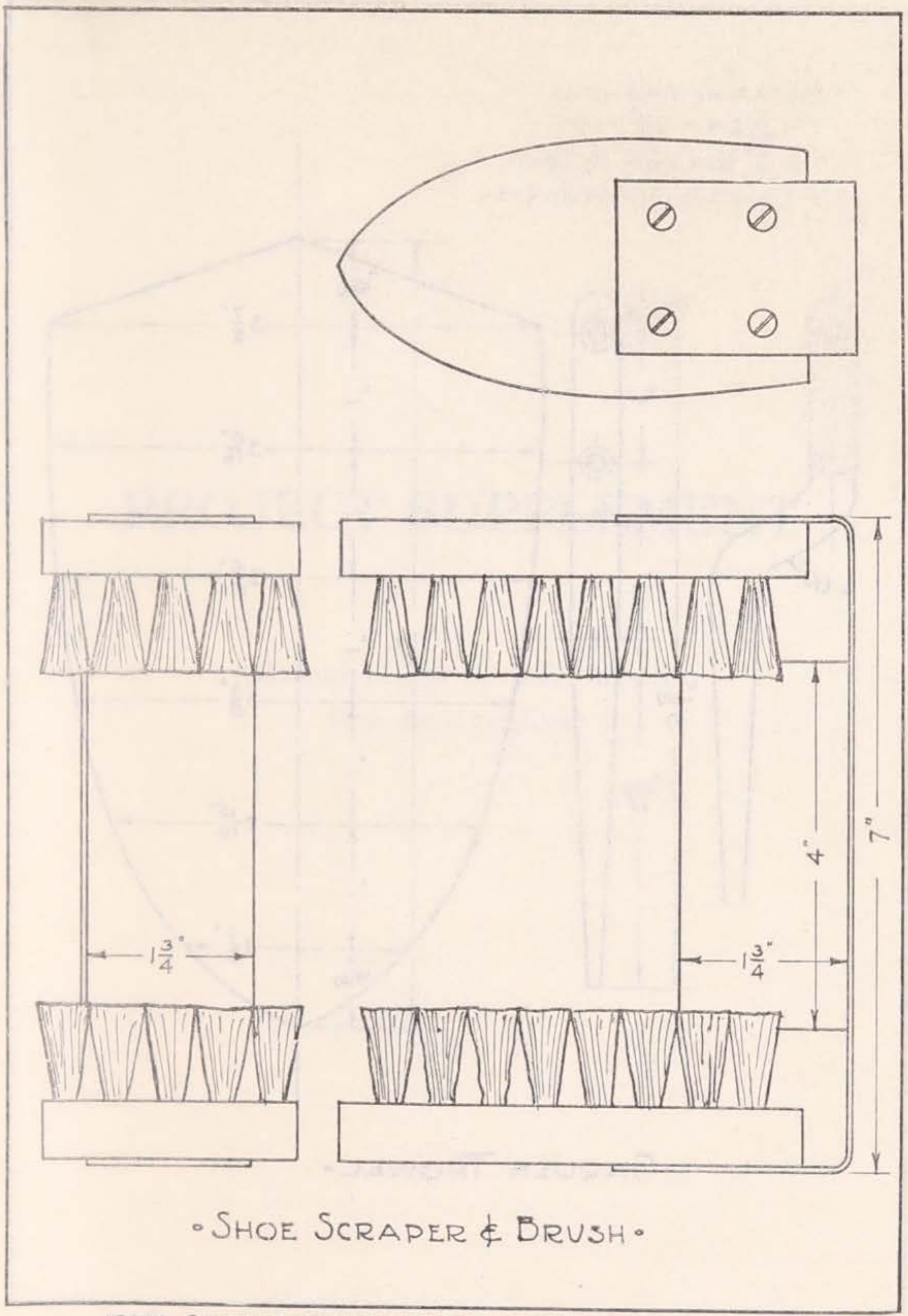

IOWA COURSE OF STUDY FOR INDUSTRIAL ARTS - 1930

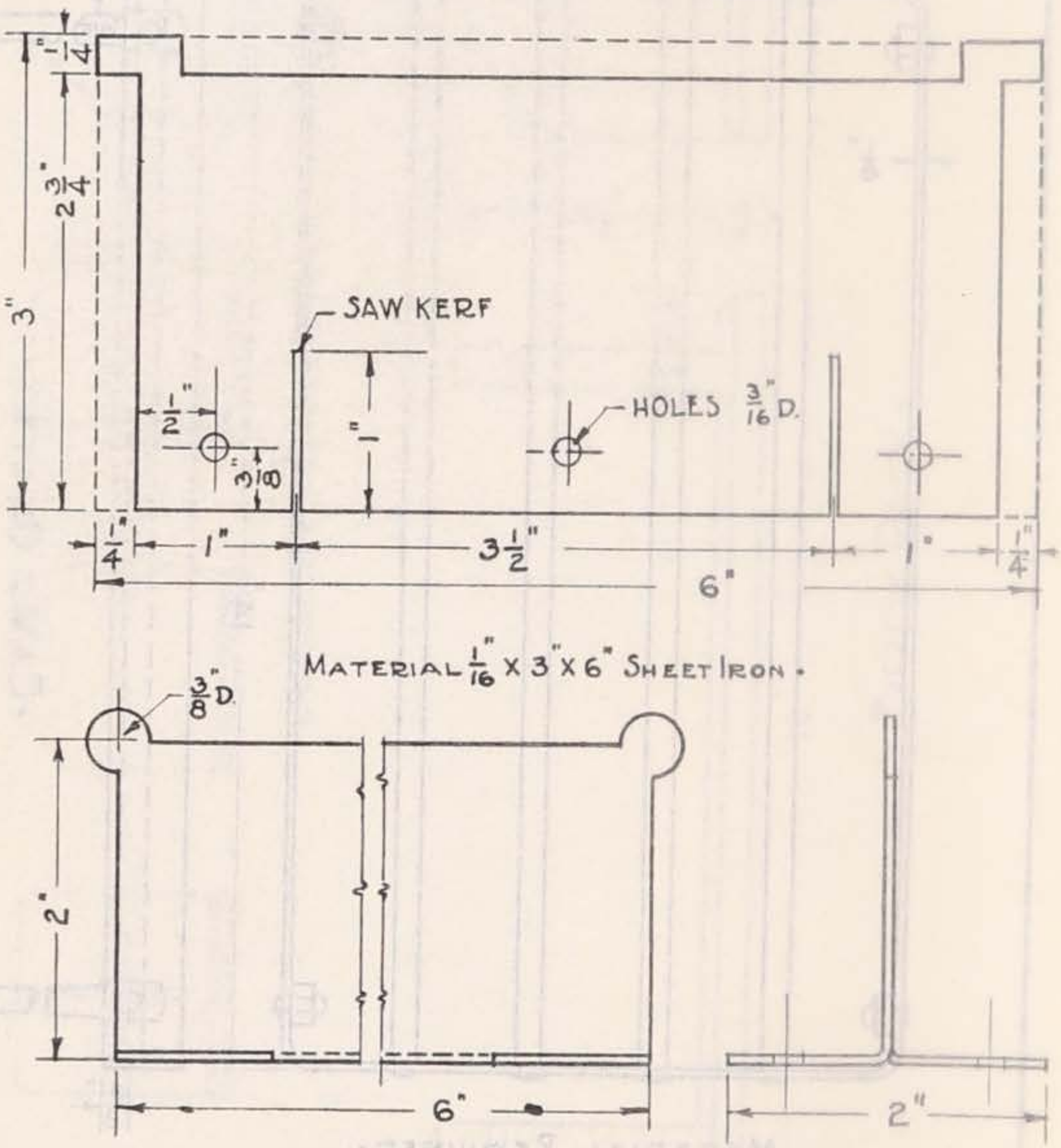

• FOOT SCRAPER •

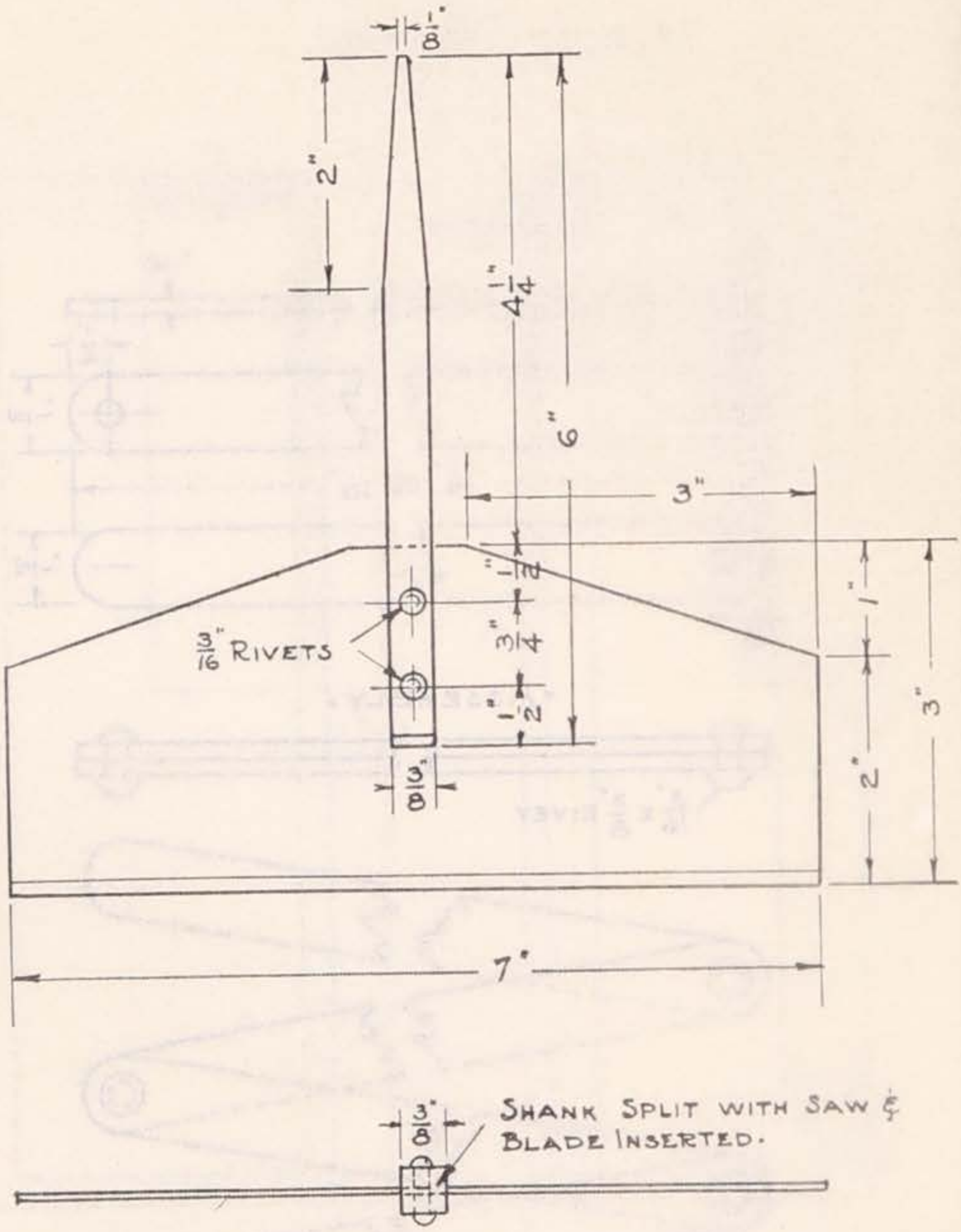
1/8"
2"
4 1/4"
6"
3"
1/10"
3/4"
1/2"
1"
2"
3"
3/16" RIVETS
3/8"
7"
3/8"
SHANK SPLIT WITH SAW & BLADE INSERTED.

·ICE SCRAPER·

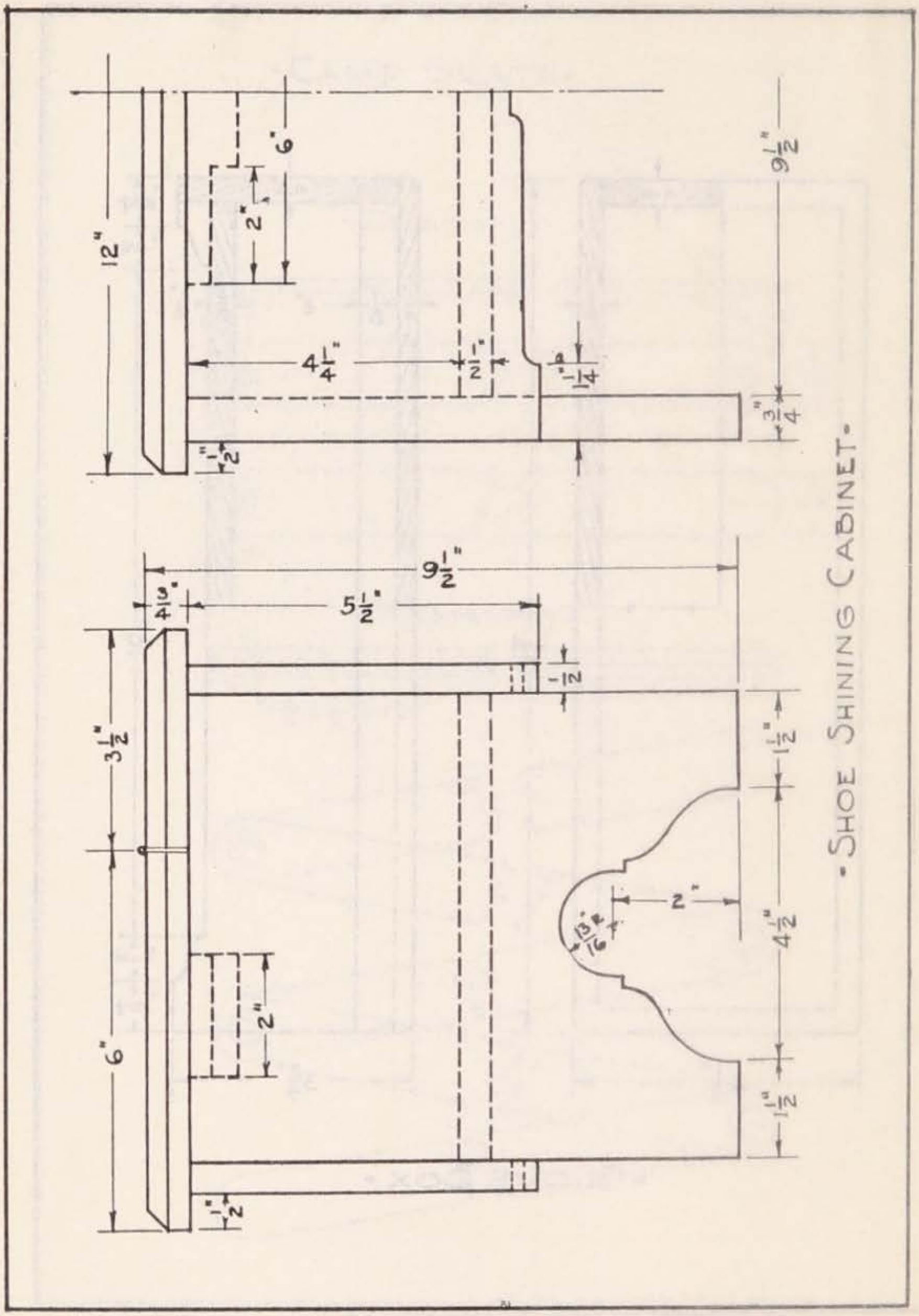

• SHOE SHINING CABINET •

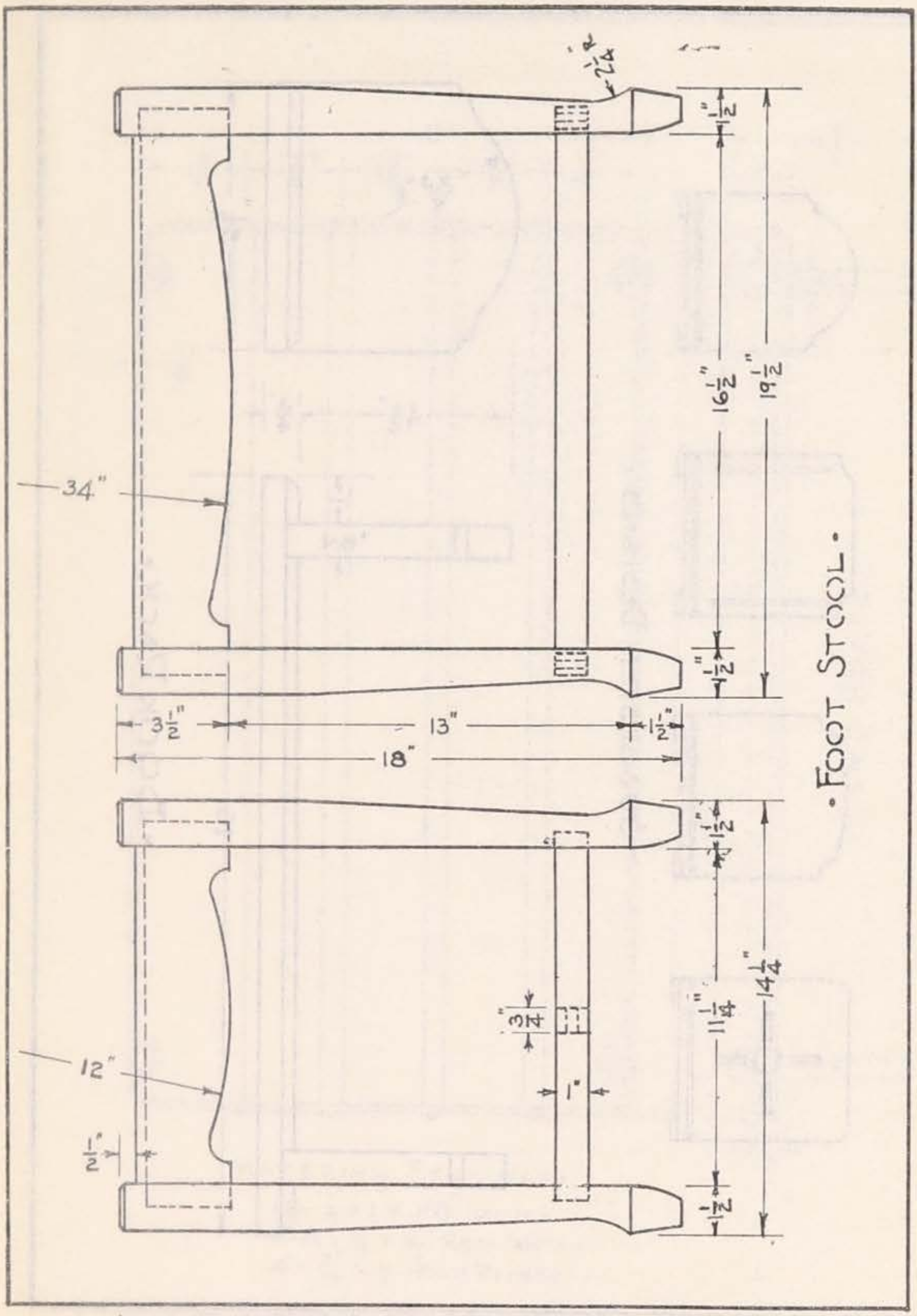

IOWA COURSE OF STUDY FOR INDUSTRIAL ARTS - 1930

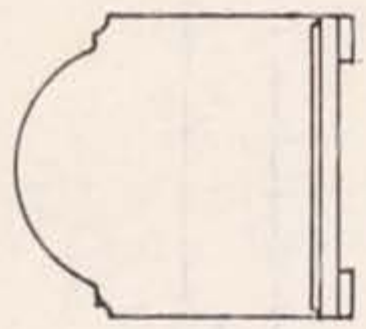

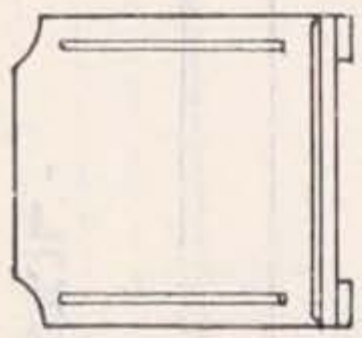

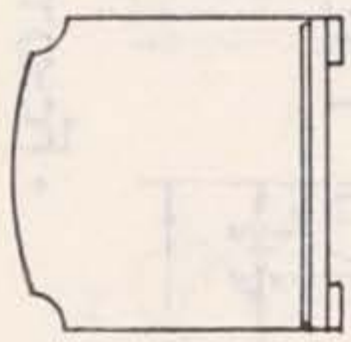

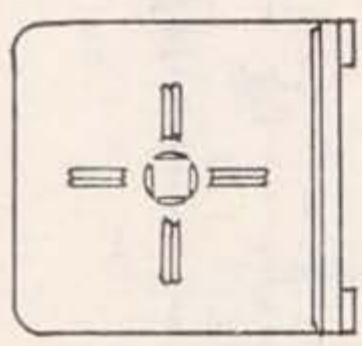

• SUGGESTED DESIGNS •

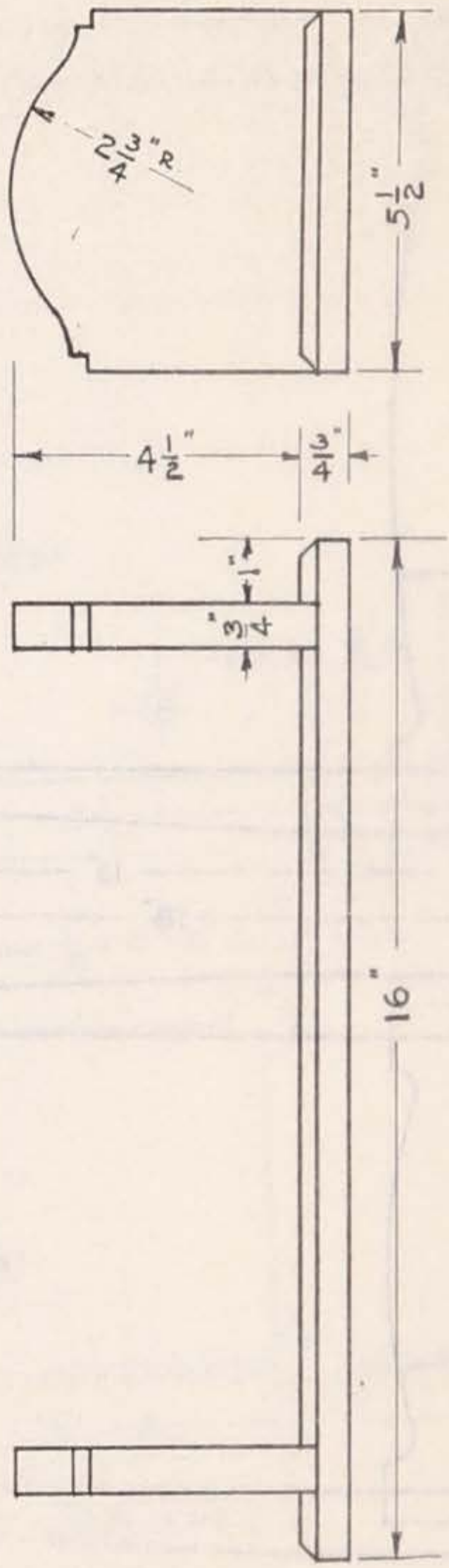

• BOOK RACK •

IOWA COURSE OF STUDY FOR INDUSTRIAL ARTS - 1930

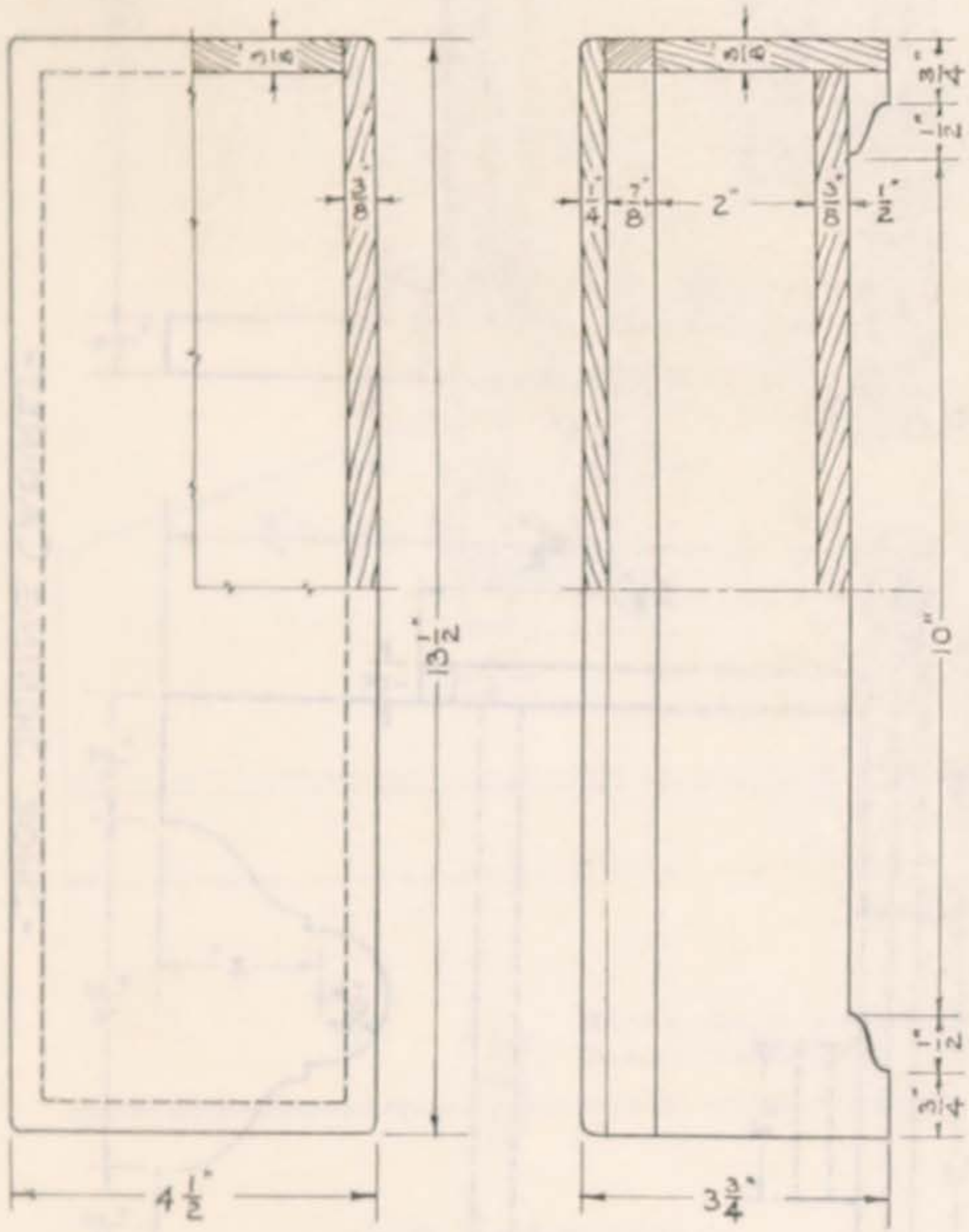

• GLOVE BOX •

• CAMP GRATE •

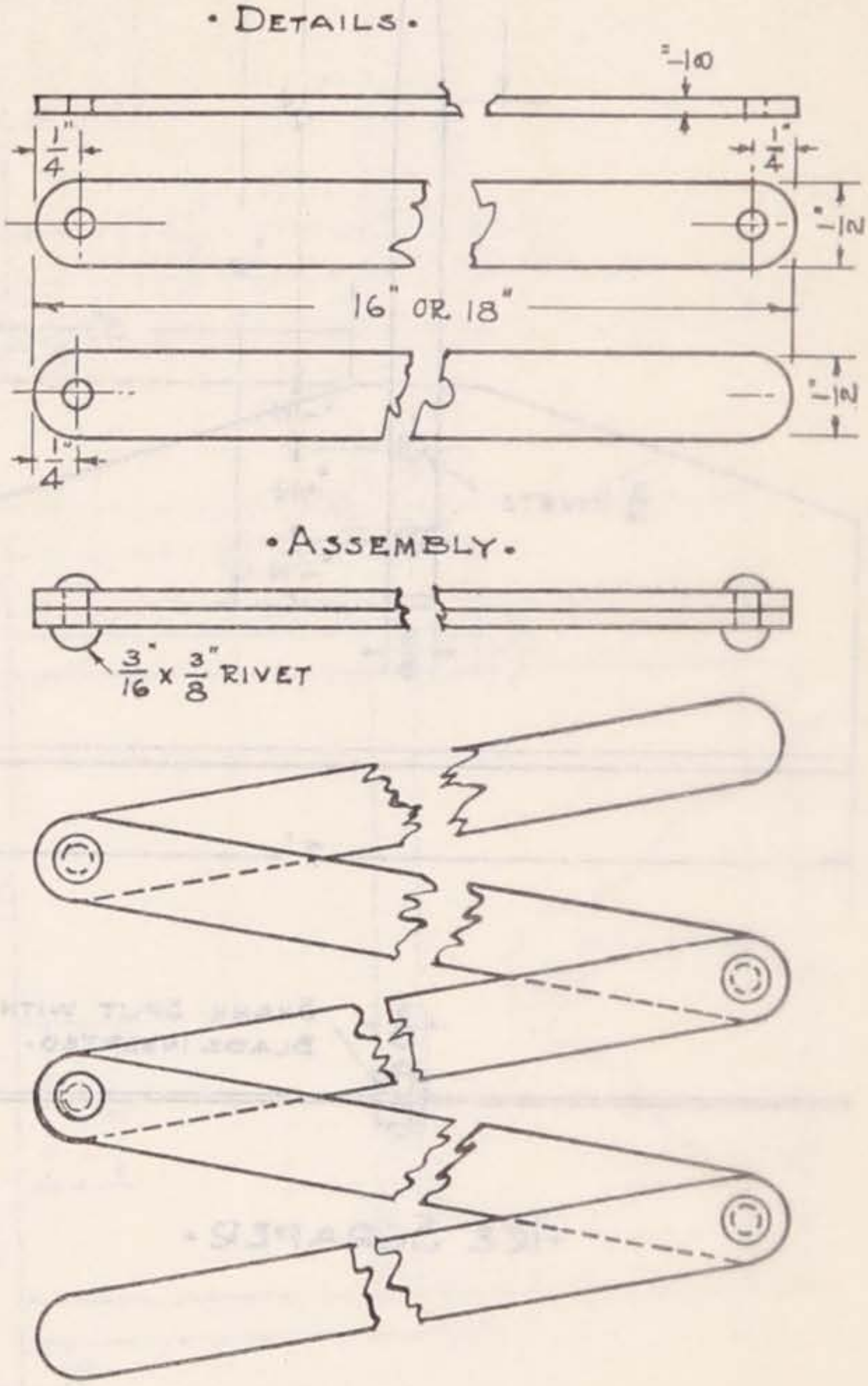

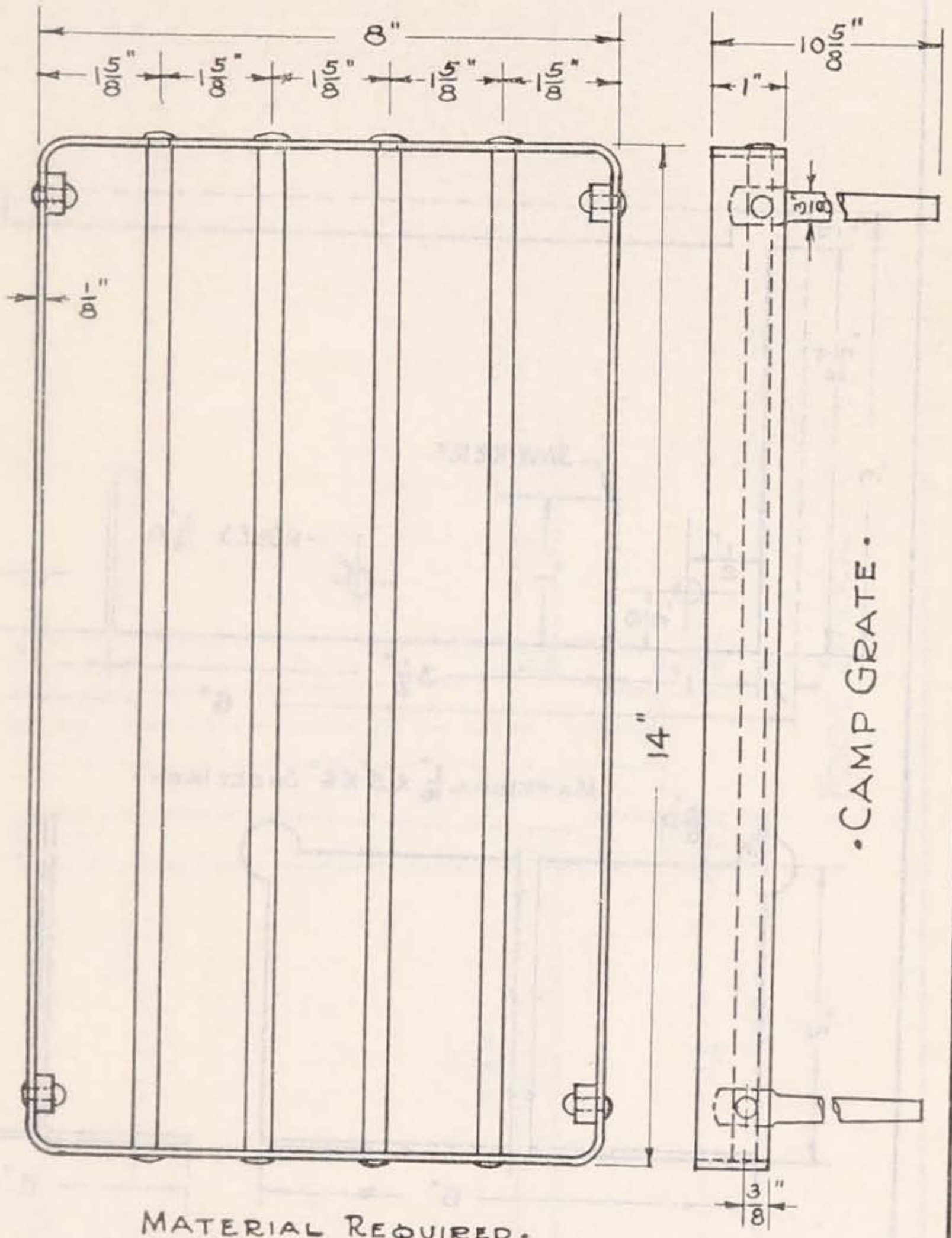

• CAMP GRATE •

MATERIAL REQUIRED.

1-Pc. 1/8" x 1" x 48" IRON.
4-Pcs 3/8" x 10" ROD IRON.
4- 3/16" x 1/2" IRON RIVETS.

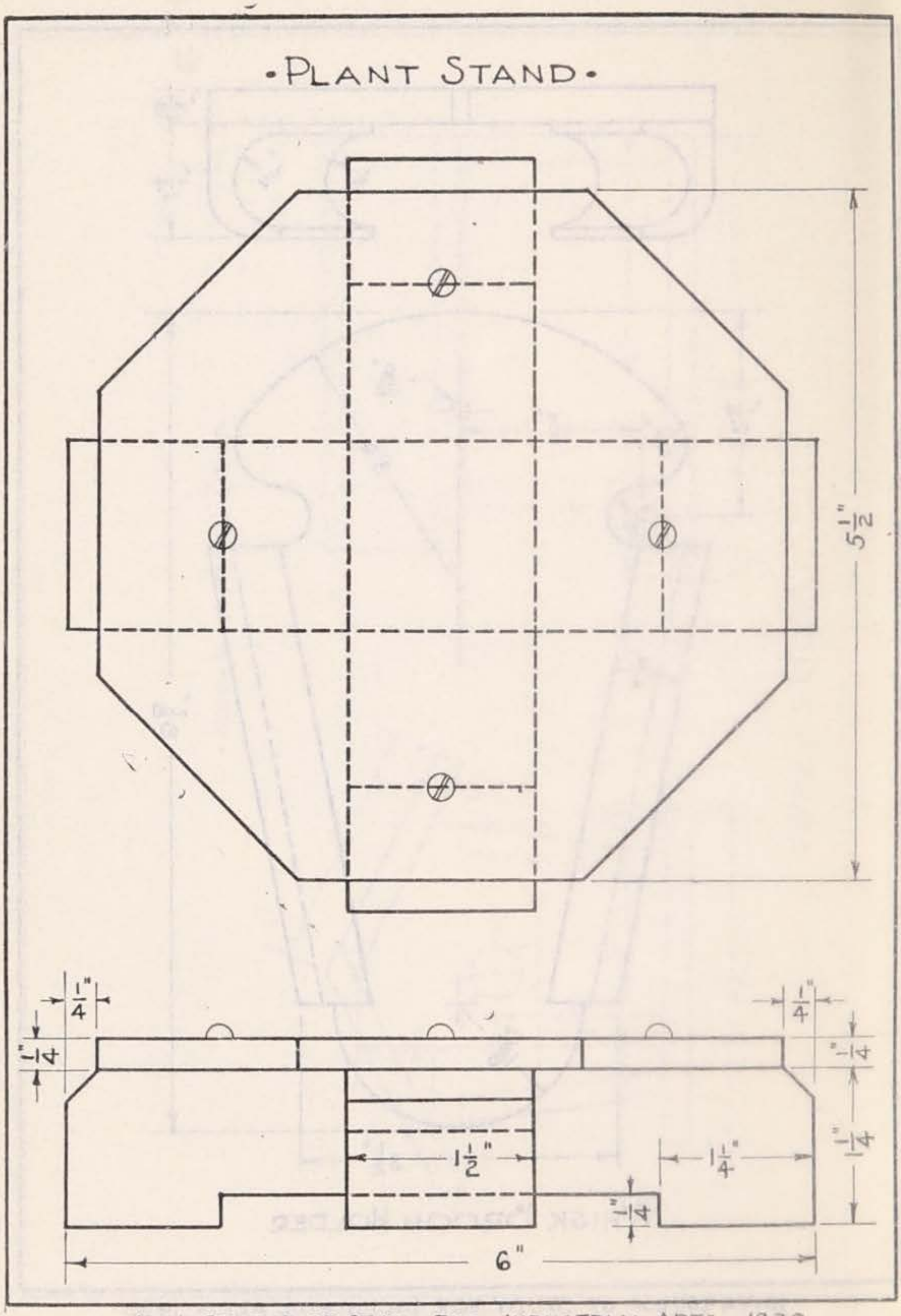
•PLANT STAND•
5 1/2"
1/4"
1/4"
1/4"
1/4"
1/4"
1/4"
1 1/2"
1 1/4"
1/4"
6"

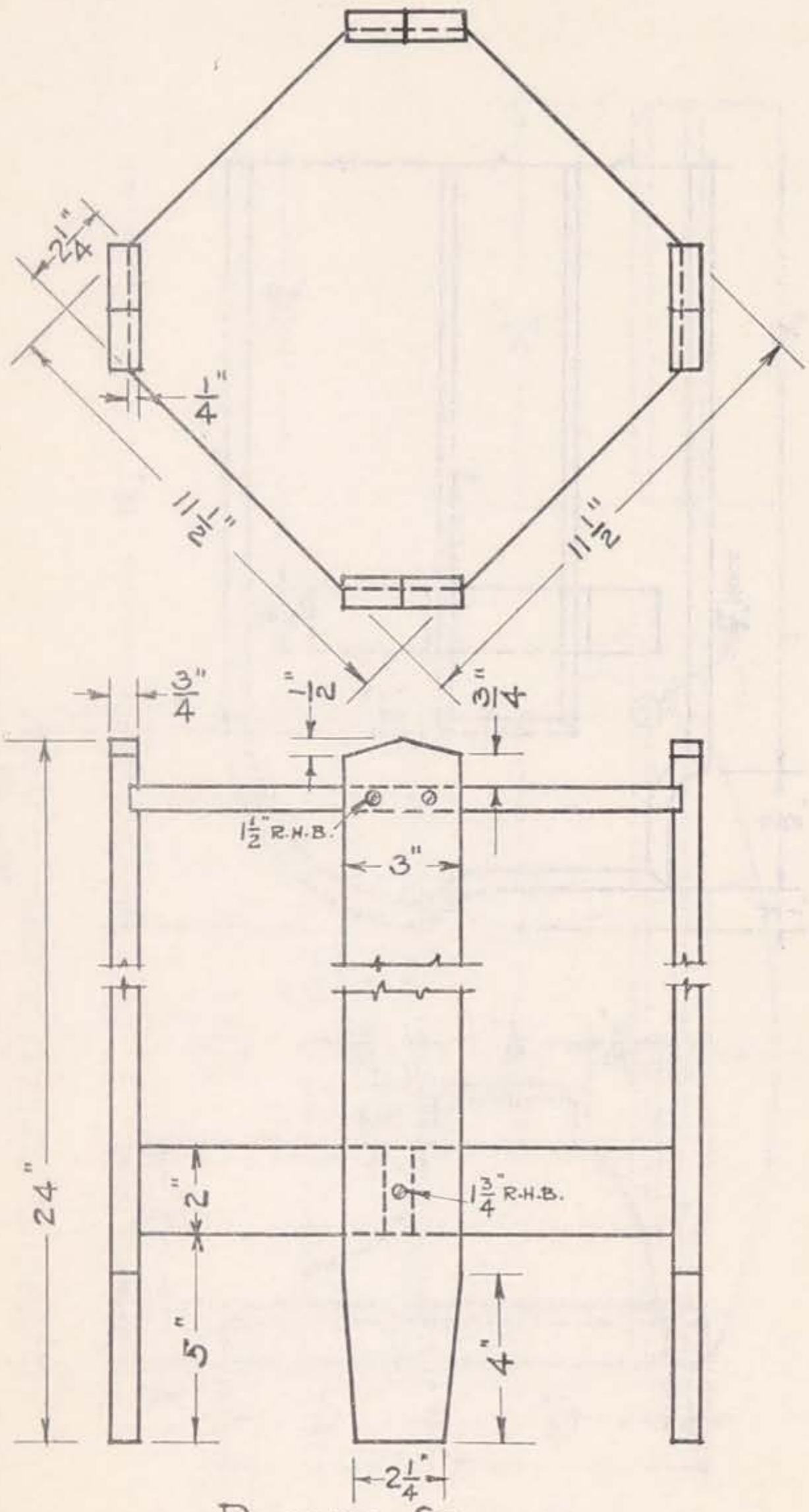

- PLANT STAND -

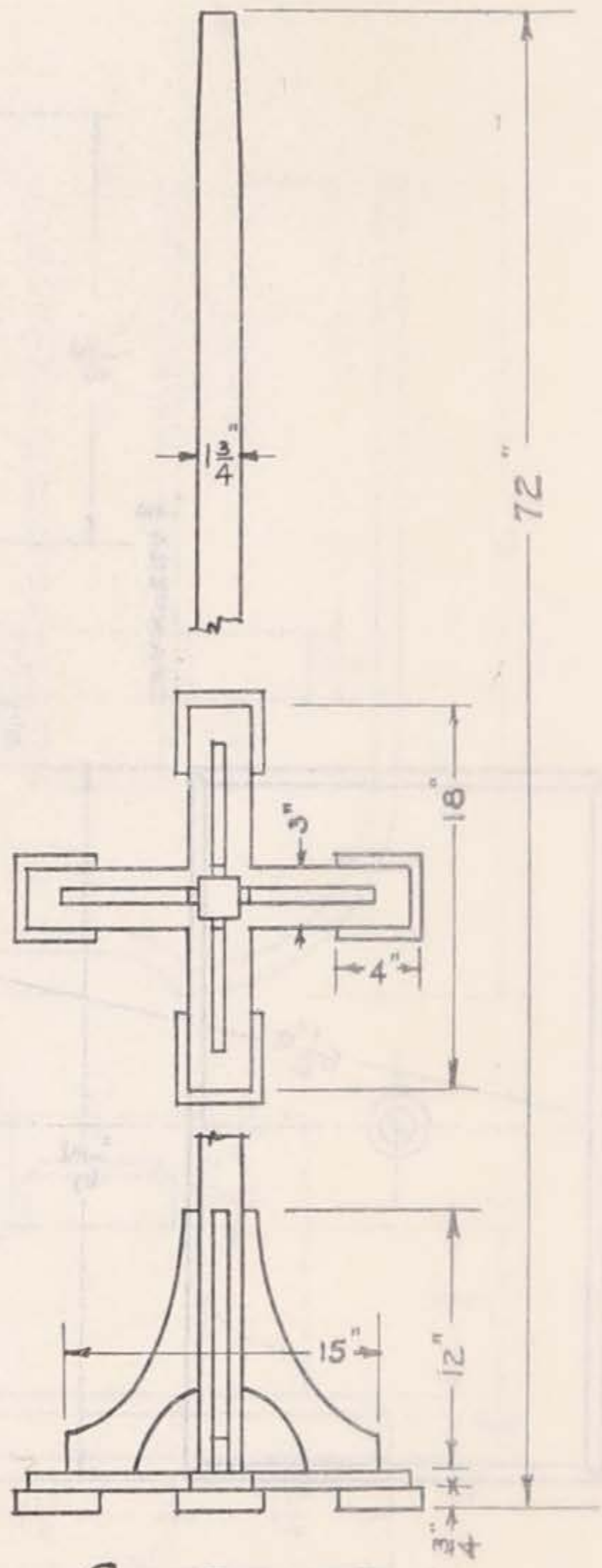

· COSTUMER ·

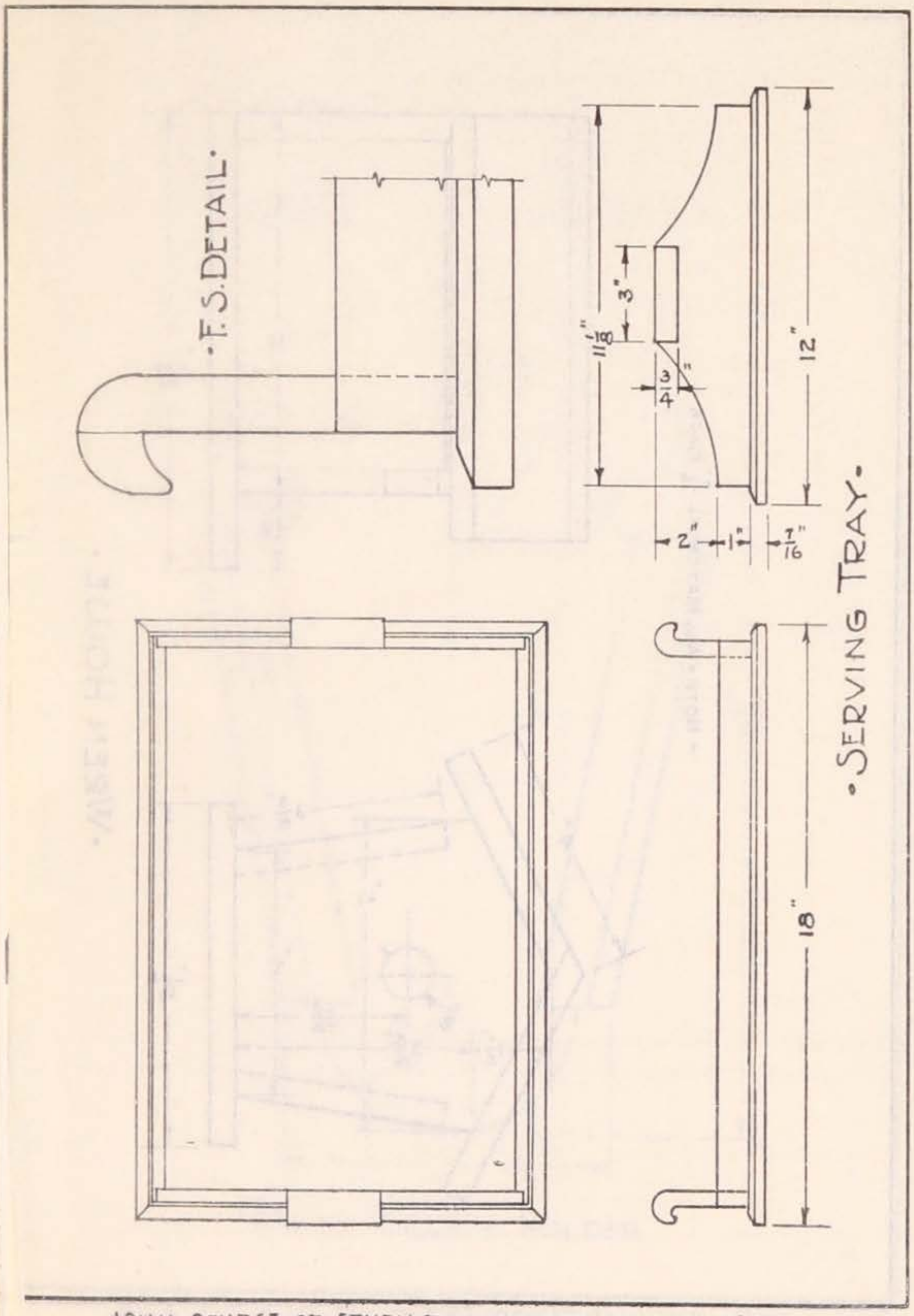

IOWA COURSE OF STUDY FOR INDUSTRIAL ARTS - 1930

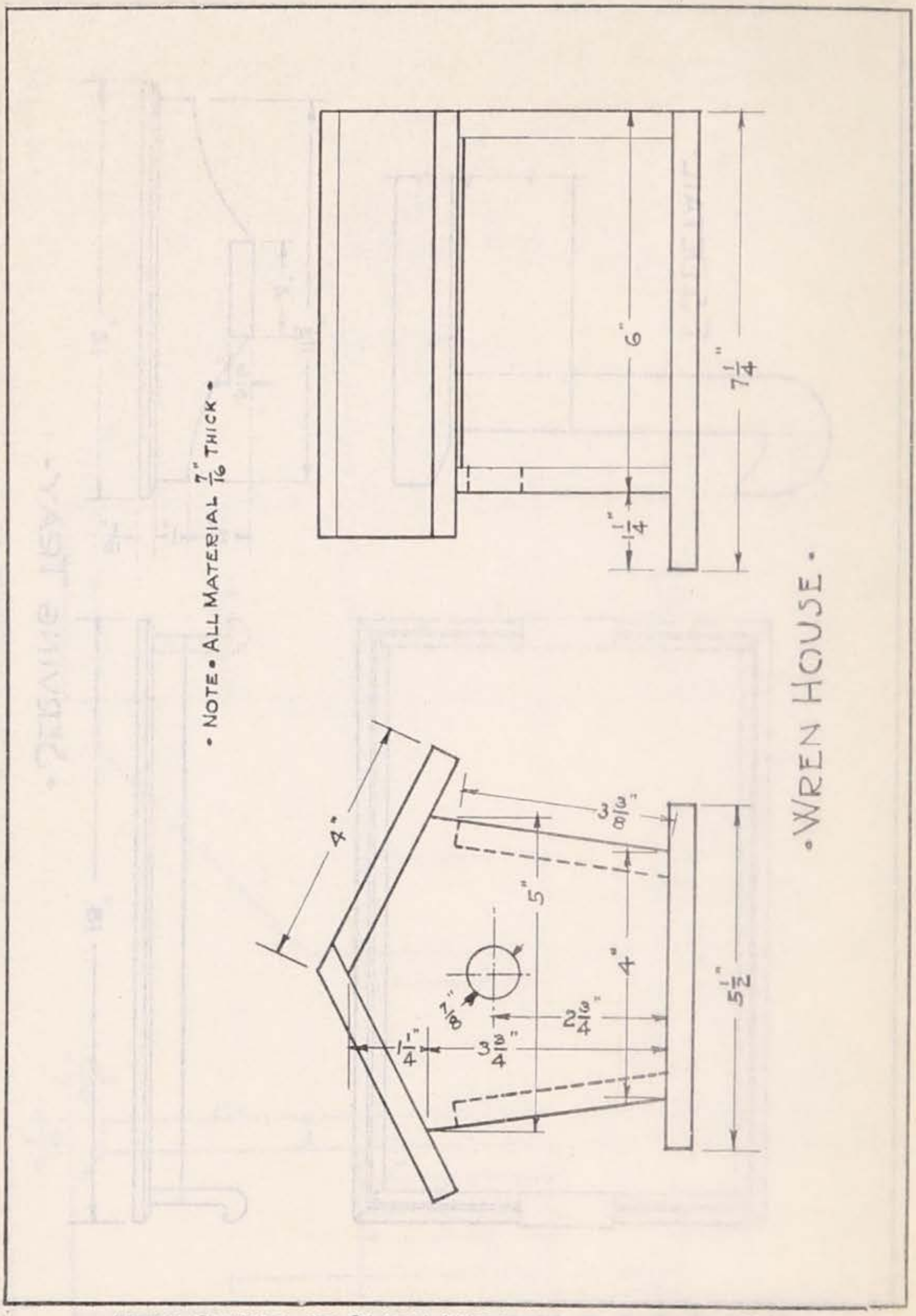

IOWA COURSE OF STUDY FOR INDUSTRIAL ARTS - 1930

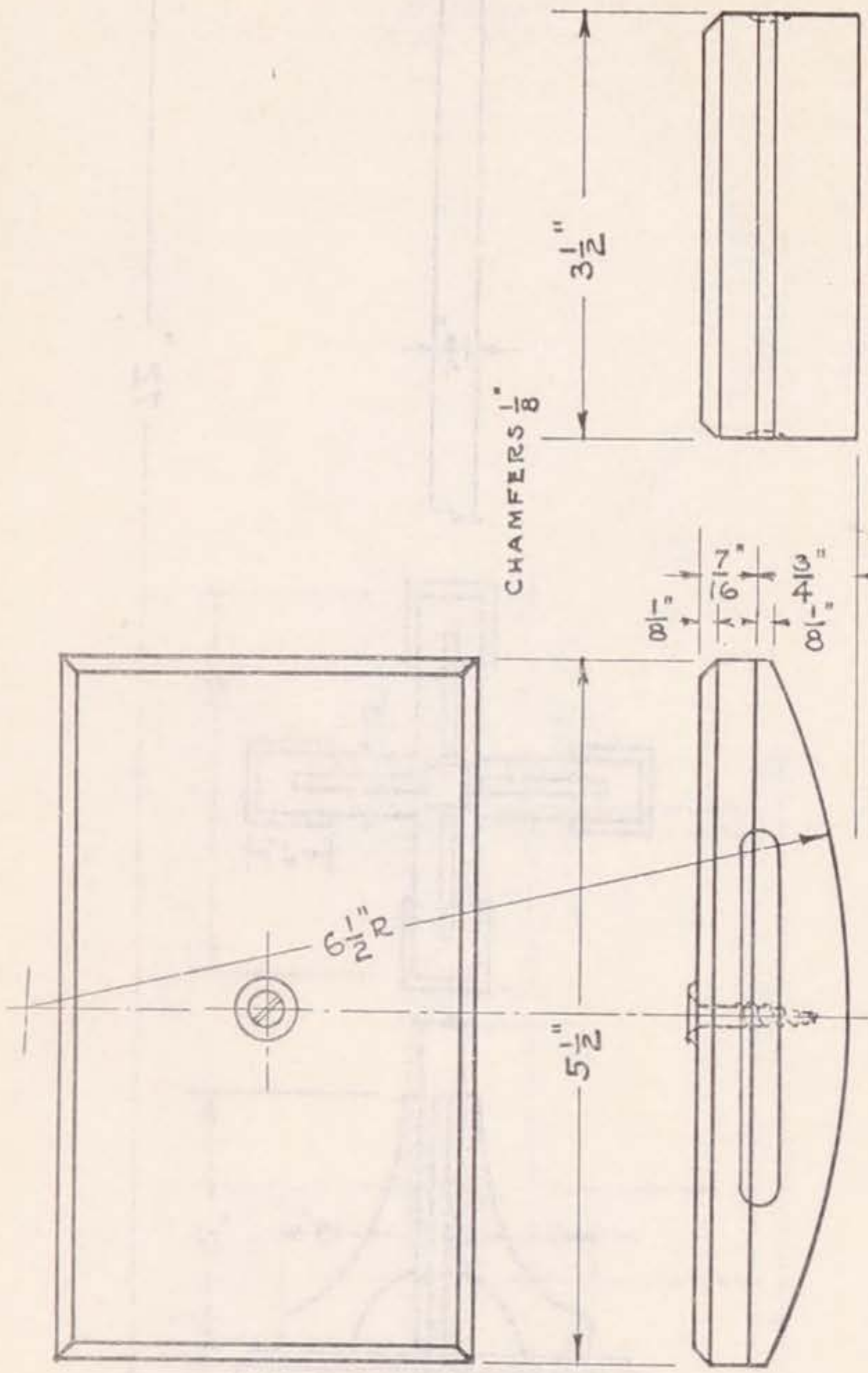

BLOTTER PAD.

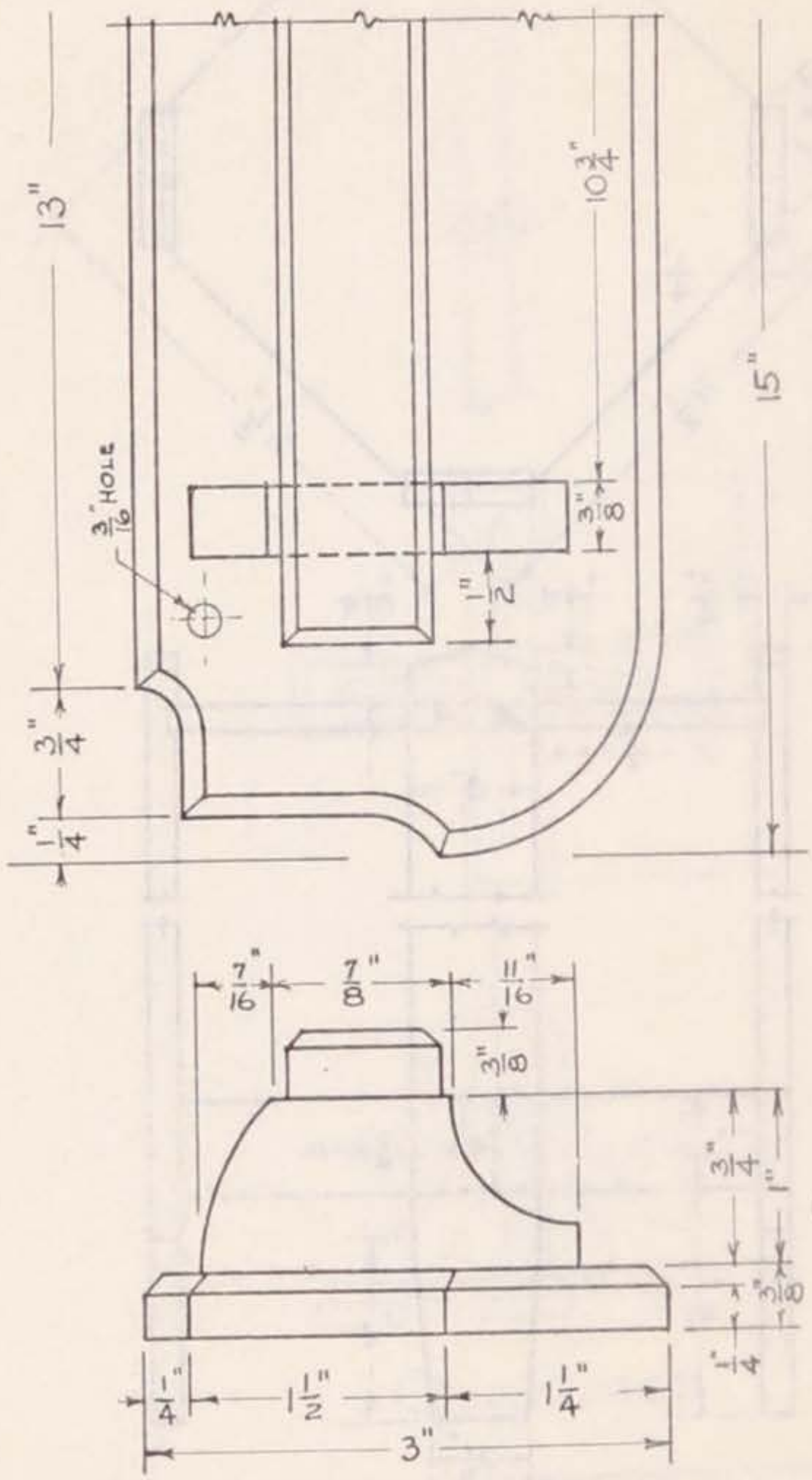

·TIE RACK·

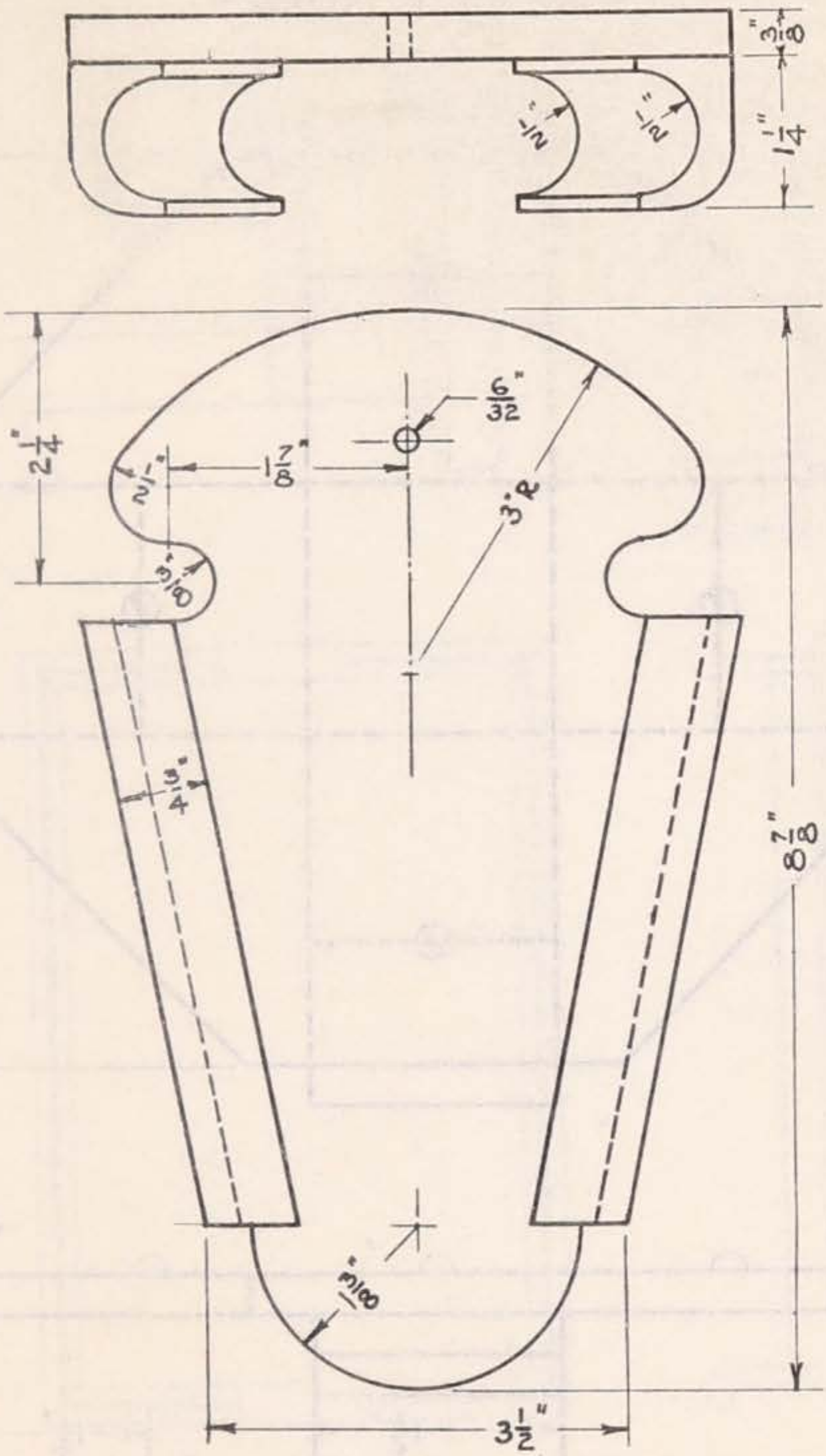

WHISK BROOM HOLDER

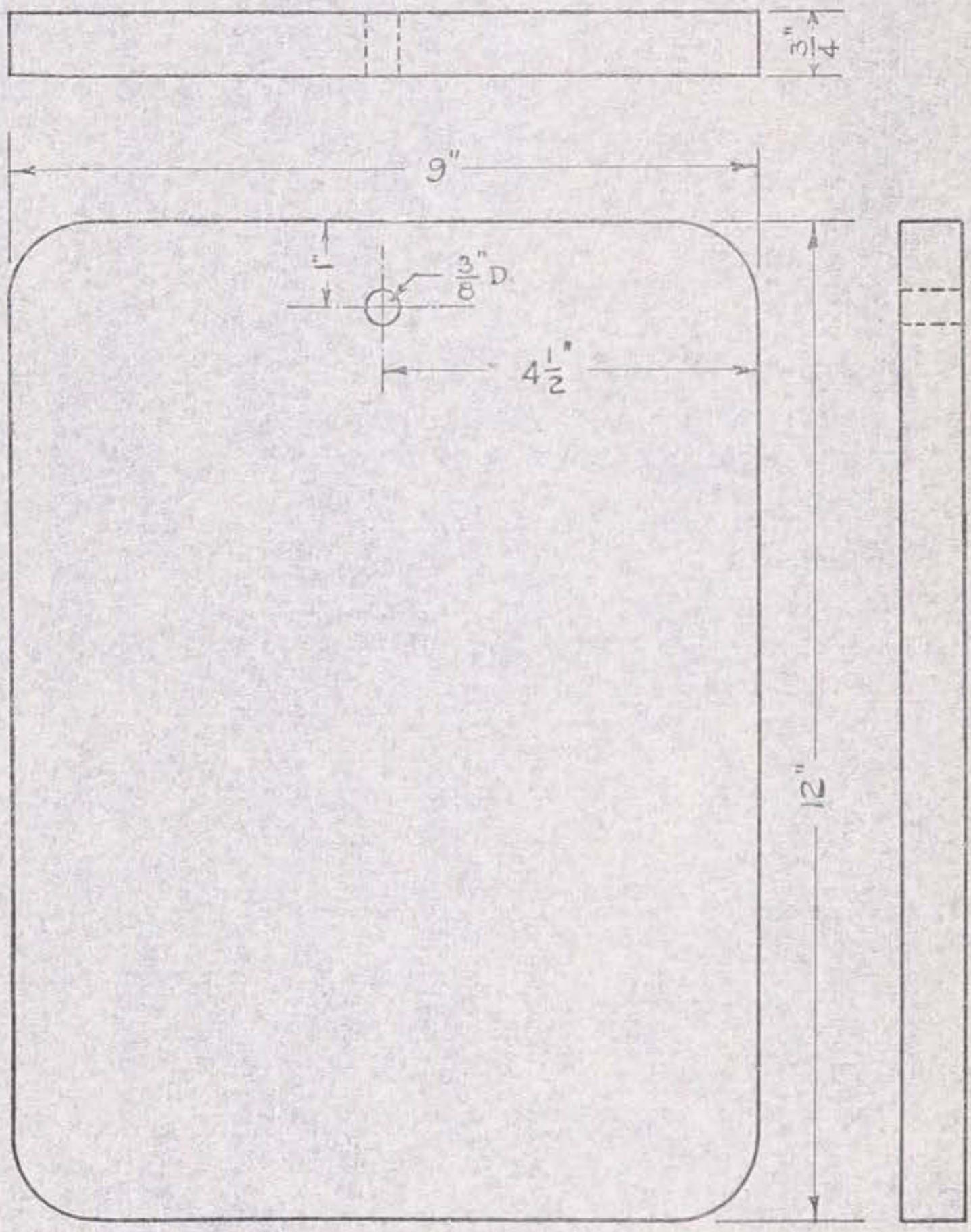

BREAD BOARD.

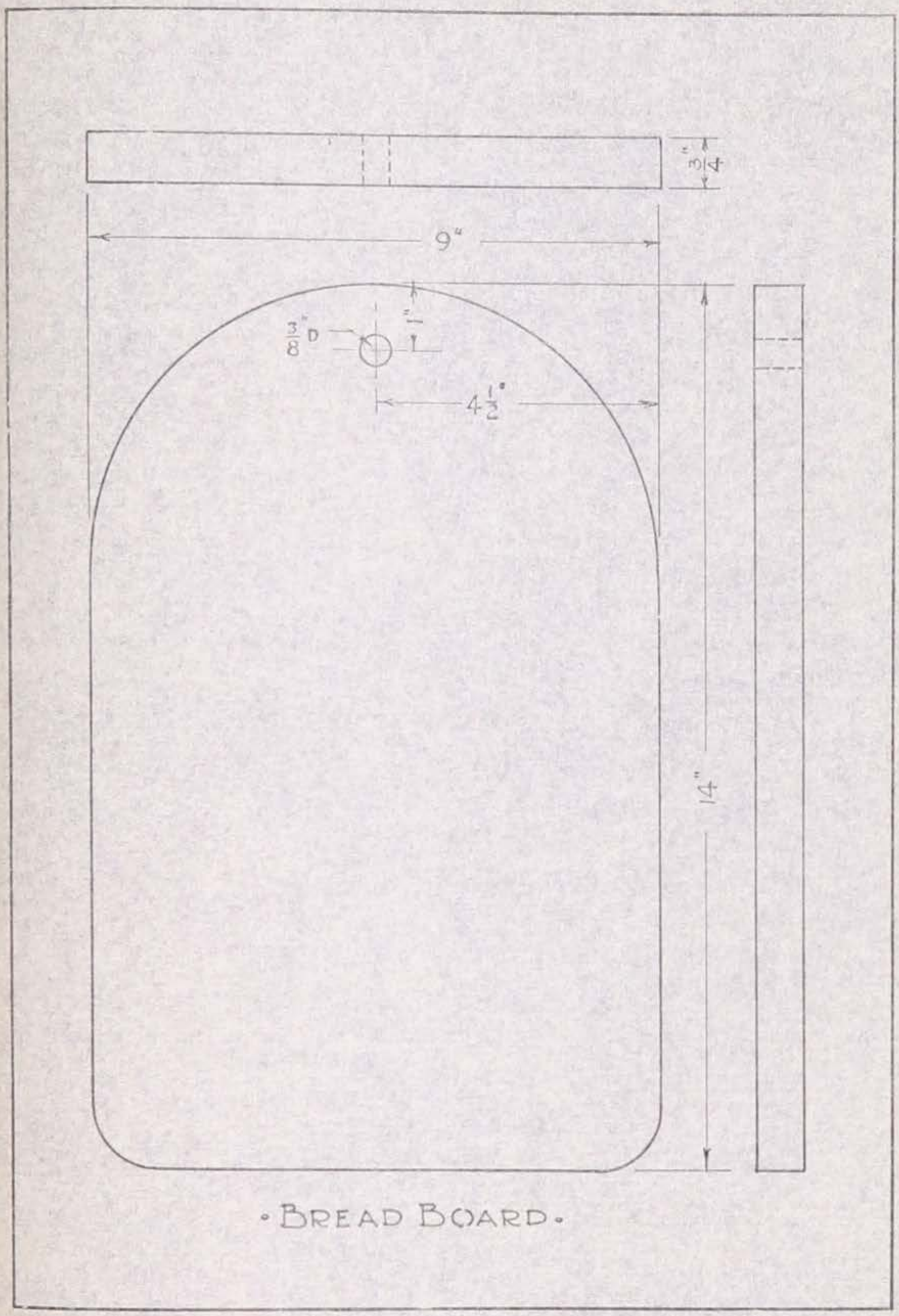

IOWA COURSE OF STUDY FOR INDUSTRIAL ARTS 1930