A d d e n d u m

Iowa Department of Transportation
Office of Contracts

Date of Letting: June 19, 2012
Date of Addendum: June 1, 2012

B.O.	Proposal ID	Proposal Work Type	County	Project Number	Addendum
356	00-000S-560	Dynamic Message Signs	Statewide	ITS-000-S(560)--25-00	19jun356.a01

Notice: Only the bid proposal holders receive this addendum and responsibility for notifying any potential subcontractors or suppliers remains with the proposal holder.

Make the following changes to the PROPOSAL SCHEDULE OF PRICES:

Change Line No. 0290 2528-8445113 FLAGGERS from 120.000 EACH to 40.000 EACH and Bid Amount from 39,000.00 to 13,000.00.
Change Line No. 0300 2528-8445115 PILOT CARS from 60.000 EACH to 20.000 EACH and Bid Amount from 29,400.00 to 9,800.00.

If the quantities are not changed on the proposal form, the bid amounts will be extended using the unit price times the correct quantities as shown here. The Unit Price remains the same.

Make the following change to the Plan Sheet A.1:

Replace Tab.: STANDARD BRIDGE PLANS
With Attached Tab.: STANDARD BRIDGE PLANS

Steel Overhead Sign Truss Standard Sheet SOST-01-11
Add the following text at the bottom of the list in the Index for Steel Overhead Sign Truss Standards: "SOST-18-11 Conduit Location Details"

Steel Overhead Sign Truss Standard Sheet SOST-06-11
Replace SOST-06-11 with a modified SOST-06-11 sheet that includes hand hole details, electrical inlet details and conduit location information. (See attached sheet.)

Steel Overhead Sign Truss Standard Sheet SOST-17-11
Replace SOST-17-11 with a modified SOST-17-11 sheet that includes a note stating that electrical conduit is required in footings supporting trusses with dynamic message signs. (See attached sheet.)

Steel Overhead Sign Truss Standard Sheet SOST-18-11
Add a new SOST-18-11 sheet that shows conduit location details in footings. (See attached sheet.)

STANDARD BRIDGE PLANS	
The following Standard Bridge Plans shall be considered applicable to construction work on this project.	
Number	Date
SOST-01-11	09/11
SOST-03-11	09/11
Modified SOST-06-11	06/12
SOST-08-11	09/11
SOST-09-11	09/11
Modified SOST-17-11	06/12
SOST-18-11	06/12

INDEX FOR STEEL OVERHEAD SIGN TRUSS STANDARDS

SOST-01-11	INDEX AND NOTES FOR 50' - 130' SPANS
SOST-02-11	ELEVATION VIEWS FOR 50' - 75' SPANS
SOST-03-11	ELEVATION VIEWS FOR 80' - 100' SPANS
SOST-04-11	ELEVATION VIEWS FOR 105' - 115' SPANS
SOST-05-11	ELEVATION VIEWS FOR 120' - 130' SPANS
SOST-06-11	SUPPORT BASE AND DMS ELECTRICAL ACCESS DETAILS FOR 50' - 100' SPANS
SOST-07-11	SUPPORT BASE AND DMS ELECTRICAL ACCESS DETAILS FOR 105' - 130' SPANS
SOST-08-11	GUSSET PLATE CONNECTIONS
SOST-09-11	TRUSS SUPPORT AND CHORD SPLICE DETAILS FOR 50' - 100' SPANS
SOST-10-11	TRUSS SUPPORT AND CHORD SPLICE DETAILS FOR 105' - 130' SPANS
SOST-11-11	SIGN ATTACHMENT DETAILS
SOST-17-11	FOOTING DETAILS
SOST-18-11	CONDUIT LOCATION DETAILS

ANCHOR-BOLT NUT TIGHTENING PROCEDURE:

1) THIS WORK SHALL BE PERFORMED ONLY ON DAYS WITH WINDS LESS THAN 15 MPH. ALL TIGHTENING OF THE NUTS IS TO BE DONE IN THE PRESENCE OF THE INSPECTOR. ONCE THE TIGHTENING PROCEDURE IS STARTED IT MUST BE COMPLETED ON ALL OF THE BASE PLATE NUTS WITHOUT PAUSE OR DELAY.

2) PROPERLY SIZED WRENCHES DESIGNED FOR TIGHTENING NUTS AND/OR BOLTS SHALL BE USED TO AVOID ROUNDING OR OTHER DAMAGE TO THE NUTS. ADJUSTABLE END OR PIPE WRENCHES MAY NOT BE USED.

3) BASE PLATE, ANCHOR RODS AND NUTS ARE TO BE FREE OF ANY DIRT OR DEBRIS.

4) APPLY STICK WAX OR BEES WAX TO THE THREADS AND BEARING SURFACES OF THE ANCHOR BOLT, NUTS, AND WASHERS.

5) TIGHTEN TOP NUTS SO THEY FULLY CONTACT THE BASE PLATE. TIGHTEN LEVELING NUTS TO SNUG TIGHT CONDITION. SNUG TIGHT IS DEFINED AS THE FULL EFFORT OF ONE PERSON ON A WRENCH WITH A LENGTH EQUAL TO 14 TIMES THE BOLT DIAMETER BUT NOT LESS THAN 18 INCHES. APPLY FORCE AS CLOSE TO THE END OF THE WRENCH AS POSSIBLE. PULL FIRMLY BY LEANING BACK AND USING ENTIRE BODY WEIGHT ON THE END OF THE WRENCH UNTIL THE NUT STOPS ROTATING. USE A MINIMUM OF TWO SEPARATE PASSES OF TIGHTENING. SEQUENCE THE TIGHTENING IN EACH PASS SO THAT THE NUT ON THE OPPOSITE SIDE, TO THE EXTENT POSSIBLE, WILL BE SUBSEQUENTLY TIGHTENED UNTIL ALL OF THE NUTS IN THAT PASS HAVE BEEN TIGHTENED.

6) TIGHTEN TOP NUTS TO SNUG TIGHT AS DESCRIBED FOR THE LEVELING NUTS.

7) MATCH-MARK THE TOP NUTS AND BASE PLATE USING PAINT, CRAYON, OR OTHER APPROVED MEANS TO PROVIDE A REFERENCE FOR DETERMINING THE RELATIVE ROTATION OF THE NUT AND BASE PLATE DURING TIGHTENING. USING A STRIKING OR HYDRAULIC WRENCH, FURTHER TIGHTEN THE TOP NUTS IN TWO PASSES AS LISTED BELOW. USE A SEQUENCE OF TIGHTENING IN EACH PASS SO THAT THE NUT ON THE OPPOSITE SIDE, TO THE EXTENT POSSIBLE, WILL BE SUBSEQUENTLY TIGHTENED UNTIL ALL NUTS IN THAT PASS HAVE BEEN TURNED. DO NOT ROTATE THE LEVELING NUT DURING THE TOP NUT TIGHTENING.

ANCHOR-BOLT SIZE	FIRST PASS	SECOND PASS	TOTAL ROTATION
$1\frac{1}{2}$"Φ	1/6 TURN	1/6 TURN	1/3 TURN

8) LUBRICATE, PLACE AND TIGHTEN THE JAM NUTS TO SNUG TIGHT.

STAINLESS STEEL BOLTING NOTES:

UNLESS OTHERWISE NOTED ON THE PLANS, ALL STAINLESS STEEL U-BOLTS SHALL BE FURNISHED WITH STAINLESS STEEL REGULAR HEXAGONAL NUTS, JAM NUTS AND WASHERS. STAINLESS STEEL U-BOLTS SHALL COMPLY WITH REQUIREMENTS OF ASTM A320, TYPE 304 OR ASTM F593 GROUP 1, 2, OR 3 CONDITION A.

STEEL NOTES:

ALL STEEL SHAPES FOR DMS CONNECTION DETAILS SHALL COMPLY WITH ASTM A572 GRADE 50. ALL STEEL BARS AND PLATES SHALL COMPLY WITH ASTM A36 OR BETTER. THE GALVANIZED METAL BAR GRATING INCLUDING BEARING BARS, CROSS BARS, AND BANDING BARS SHALL COMPLY WITH ASTM A1011 TYPE 2.

ALL STEEL PIPE SHALL COMPLY WITH ASTM A53 GRADE B, TYPE E OR S OR THE AMERICAN PETROLEUM INSTITUTE (API) 5L GRADE B. ALL ROUND HOLLOW STRUCTURAL SECTIONS (HSS) SHALL MEET THE REQUIREMENTS OF ASTM A500 GRADE B. ALL STEEL SECTIONS SHALL BE HOT DIPPED GALVANIZED AFTER FABRICATION IN ACCORDANCE WITH ASTM A123. PROVIDE VENT HOLES FOR GALVANIZING.

ALL ANCHOR BOLT MATERIAL SHALL COMPLY WITH IOWA DOT MATERIALS IM 453.08.

STEEL WELDING SHALL BE IN ACCORDANCE WITH THE CURRENT EDITION OF THE AWS SPECIFICATIONS D1.1, STRUCTURAL WELDING CODE—STEEL.

ULTRASONIC TESTING SHALL BE PERFORMED ON THE POST TO BASE PLATE WELDS.

THE $\frac{3}{4}$"Φ A325 GALVANIZED BOLTS SHALL BE TENSIONED BY TURN-OF-THE-NUT METHOD.

ADDENDUM:

SHEET SOST-18-11 ADDED TO INDEX FOR STEEL OVERHEAD SIGN TRUSS STANDARDS

SPECIFICATIONS:

DESIGN: AASHTO STANDARD SPECIFICATIONS FOR STRUCTURAL SUPPORTS FOR HIGHWAY SIGNS, LUMINAIRES AND TRAFFIC SIGNALS, SERIES OF 2009 WITH CURRENT INTERIMS.

CONSTRUCTION: IOWA DEPARTMENT OF TRANSPORTATION STANDARD SPECIFICATIONS FOR HIGHWAY AND BRIDGE CONSTRUCTION, SERIES 2009, PLUS APPLICABLE GENERAL SUPPLEMENTAL SPECIFICATIONS, DEVELOPMENTAL SPECIFICATIONS, SUPPLEMENTAL SPECIFICATIONS AND SPECIAL PROVISIONS SHALL APPLY TO CONSTRUCTION WORK ON THIS PROJECT.

DESIGN STRESSES:

DESIGN STRESSES FOR MATERIALS ARE IN ACCORDANCE WITH AASHTO STANDARD SPECIFICATIONS FOR STRUCTURAL SUPPORTS FOR HIGHWAY SIGNS, LUMINAIRES AND TRAFFIC SIGNALS, SERIES OF 2009 WITH CURRENT INTERIMS.

REINFORCING STEEL IN ACCORDANCE WITH AASHTO STANDARD SPECIFICATIONS FOR HIGHWAY BRIDGES, SERIES OF 2002, SECTION 8, GRADE 60.

CONCRETE IN ACCORDANCE WITH AASHTO STANDARD SPECIFICATIONS FOR HIGHWAY BRIDGES, SERIES OF 2002, SECTION 8, f'c = 4,000 PSI.

GENERAL NOTES:

ALL STEEL OVERHEAD SIGN TRUSSES ARE DESIGNED FOR 30 lb/ft^2 WIND PRESSURE ON SUPPORT MEMBERS, 30 lb/ft^2 ON SIGNS, AND 40 lb/ft^2 ON DYNAMIC MESSAGE SIGNS (DMS). EACH DMS IS LIMITED TO A WEIGHT OF 4500 LBS., A WIDTH OF 32'-0, A HEIGHT OF 9'-0, AND A DEPTH OF 4'-0. A MAXIMUM OF ONE DMS SHALL BE MOUNTED TO EACH OVERHEAD TRUSS. NO ADDITIONAL SIGNS SHALL BE MOUNTED TO A TRUSS SUPPORTING A DMS.

ALL PIPES, SHAPES, AND PLATES SHALL BE STRUCTURAL STEEL COMPLYING WITH THE ASTM SPECIFICATIONS NOTED.

SHOP DRAWINGS SHALL BE SUBMITTED FOR REVIEW.

SHOP DRAWINGS SHALL INDICATE LEFT AND RIGHT TRUSS SUPPORTS.

CLEAR DISTANCE FROM FACE OF CONCRETE TO THE NEAREST REINFORCING BAR SHALL BE 2" UNLESS OTHERWISE SHOWN.

ALL STEEL REINFORCING BARS SHALL BE GRADE 60.

ALL CONCRETE SHALL BE CLASS "C" STRUCTURAL CONCRETE WITH f'c = 4,000 PSI.

KEYWAY DIMENSIONS SHOWN ON THE PLANS ARE BASED ON NOMINAL DIMENSIONS UNLESS STATED OTHERWISE. IN ADDITION, THE BEVEL USED ON THE KEYWAY SHALL BE LIMITED TO A MAXIMUM OF 10 DEGREES FROM VERTICAL.

WELDING OF ANCHOR BOLTS SHALL NOT BE ALLOWED.

STEEL OVERHEAD SIGN TRUSSES SHALL NOT BE USED ON BRIDGES WITHOUT THE APPROVAL OF THE OFFICE OF BRIDGES AND STRUCTURES.

STRUCTURAL ALIGNMENT/TOLERANCE NOTES:

THE PRECISE ALIGNING AND ERECTING OF ALL COMPONENTS OF THE OVERHEAD SIGN TRUSS AND ITS SUPPORTS SHALL BE CONSIDERED ESSENTIAL. THE CONTRACTOR SHALL SUBMIT DOCUMENTATION TO THE ENGINEER SHOWING THAT THE VARIOUS COMPONENTS HAVE BEEN MEASURED AND ARE LOCATED WITHIN THE TOLERANCES LISTED BELOW.

1) EACH FOUNDATION SHALL BE ACCURATELY LOCATED, WITH THE CENTER OF THE TWO ANCHOR BOLT GROUPS NOT MORE THAN 1 INCH FROM THE PLAN LOCATION IN THE DIRECTION PARALLEL WITH AND PERPENDICULAR TO THE OVERHEAD TRUSS.

2) THE TWO FOUNDATIONS SHALL BE PARALLEL, WITH THE DISTANCES ALONG THE OVERHEAD TRUSS BETWEEN CENTERS OF FRONT AND REAR ANCHOR BOLT GROUPS DIFFERING BY NOT MORE THAN 1 INCH.

3) ANCHOR BOLT GROUPS SHALL BE LOCATED ACCURATELY WITH CENTERS OF ADJACENT ANCHOR BOLT GROUPS IN EACH FOOTING WITHIN $\frac{3}{8}$ INCH OF THE PLAN DISTANCE APART.

4) ANCHOR BOLTS SHALL BE PLUMB WITHIN $\frac{1}{4}$ INCH PER FOOT FROM VERTICAL.

5) ANCHOR BOLTS SHALL PROJECT ABOVE TOP OF FOUNDATION WITHIN $\frac{1}{4}$ INCH OF THE PLAN DIMENSION.

6) EACH TRUSS SUPPORT POST SHALL BE PLUMB WITHIN $\frac{1}{16}$ INCH PER FOOT OF VERTICAL IN TWO PERPENDICULAR DIRECTIONS.

7) STICK-OUT OF EACH TRUSS LOWER CHORD SHALL BE WITHIN 3 AND $5\frac{1}{2}$ INCHES MEASURED FROM OUTER U-BOLT TO INSIDE OF CHORD STOP RING.

8) THE OVERHEAD TRUSS SHALL BE SQUARE WITHIN SUPPORT POSTS. THE HORIZONTAL LINES BETWEEN CHORDS SHALL BE LEVEL WITHIN $\frac{1}{16}$ INCH PER FOOT OF HORIZONTAL, AND THE VERTICAL LINES BETWEEN CHORDS SHALL BE PLUMB WITHIN $\frac{1}{16}$ INCH PER FOOT OF VERTICAL.

LATEST REVISION DATE

APPROVED BY BRIDGE ENGINEER

Iowa Department of Transportation
Highway Division

STANDARD DESIGN

STEEL OVERHEAD SIGN TRUSS

SEPTEMBER, 2011

INDEX AND NOTES

50' - 130' SPANS

MODIFIED
SOST-01-11

STEELOVERHEADSIGNTRUSS.DGN - SOST-01-11 - THIS SHEET ISSUED 9-11.

6/1/2012 8:43:51 AM jcolle W:\Projects\0000005012\BRFinal\00000560.brg SOST-01-11 11x17_pdf.pltcfg

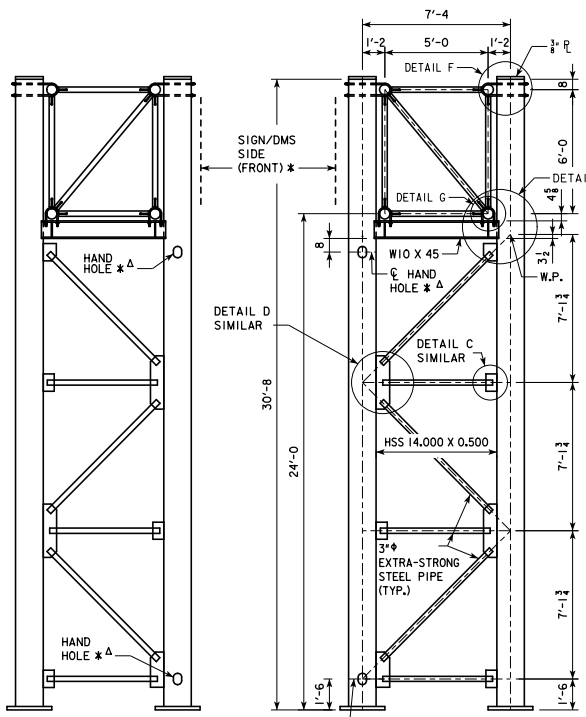

END VIEW OF TRUSS SUPPORTS

Δ - HAND HOLES SHALL BE LOCATED ONLY IN POSTS THAT ARE CLOSEST TO DYNAMIC MESSAGE SIGN AND BE POSITIONED ON SIDE OPPOSITE TRAFFIC

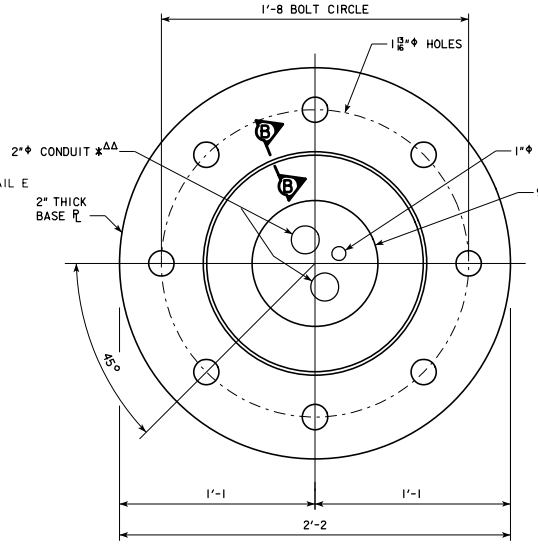

BASE PLATE PLAN

ΔΔ - CONDUITS ARE PRESENT ONLY IN POSTS WITH HAND HOLES

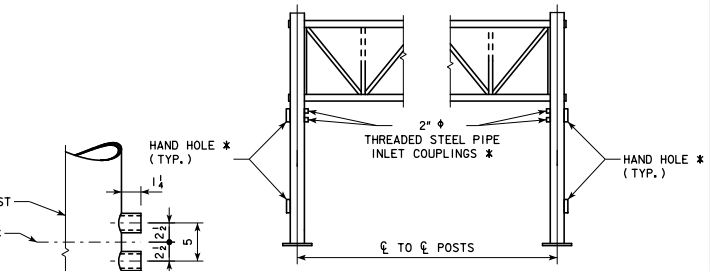

PART ELEVATION *

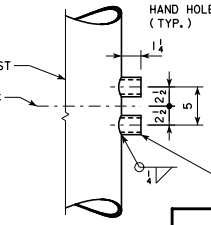

ELECTRICAL INLET *

* FOR DMS TRUSSES ONLY

HAND HOLES, CONDUIT, AND PIPE INLET COUPLINGS ARE TO BE INCLUDED ON DMS TRUSS DESIGNS ONLY. SEE STANDARD SHEET SOST-18-11 FOR FOOTING CONDUIT LOCATION DETAILS.

HAND HOLES AND ELECTRICAL INLET HOLES SHALL BE LOCATED IN BOTH TRUSS SUPPORTS UNLESS OTHERWISE INDICATED ON DETAIL PROJECT PLANS. LOCATE HOLES ONLY IN POSTS THAT ARE CLOSEST TO DYNAMIC MESSAGE SIGN.

THREADED STEEL PIPE INLET COUPLINGS ARE TO BE PLACED OPPOSITE TO UPPER HAND HOLE ON POST. COUPLINGS SHALL BE FITTED WITH STANDARD PLUGS UNTIL CONDUIT IS INSTALLED.

ALL CONDUIT SHALL BE SCHEDULE 40 PLASTIC.

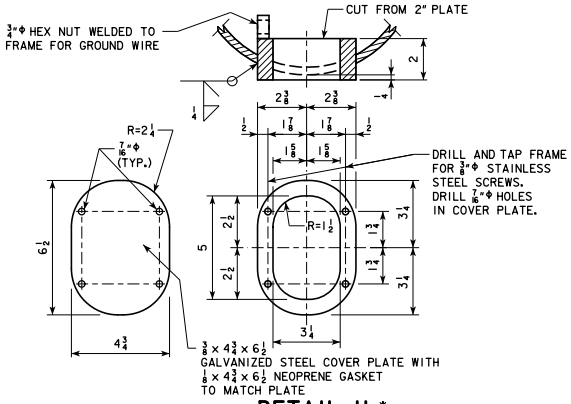

DETAIL H *

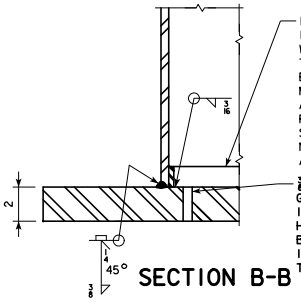

SECTION B-B

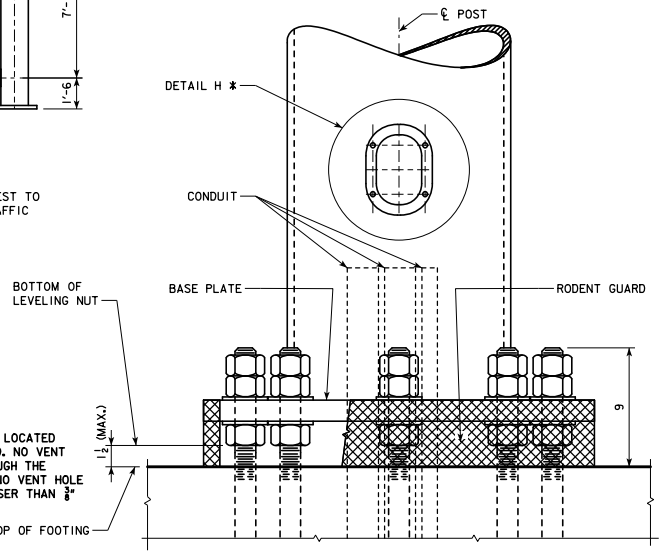

BASE SIDE VIEW

OPPOSITE OF TRAFFIC SIDE

ADDENDUM: ELECTRICAL DETAILS ADDED

NOTE: SEE STANDARD SHEET SOST-08-11 FOR DETAILS C, D, AND E.

NOTE: SEE STANDARD SHEET SOST-09-11 FOR DETAILS F AND G.

LATEST REVISION DATE	APPROVED BY BRIDGE ENGINEER	Iowa Department of Transportation *Highway Division*	
		STANDARD DESIGN STEEL OVERHEAD SIGN TRUSS SEPTEMBER, 2011	
		SUPPORT POST BASE AND DMS ELECTRICAL ACCESS DETAILS 50'-100' SPANS	MODIFIED SOST-06-11

STEELOVERHEADSIGNTRUSS.DGN - MODIFIED SOST-06-11 - THIS SHEET ISSUED 6-12.

6/1/2012 8:43:53 AM jcolle W:\Projects\0000005012\BRFinal\00000560.brg SOST-06-11 11x17_pdf.pltcfg

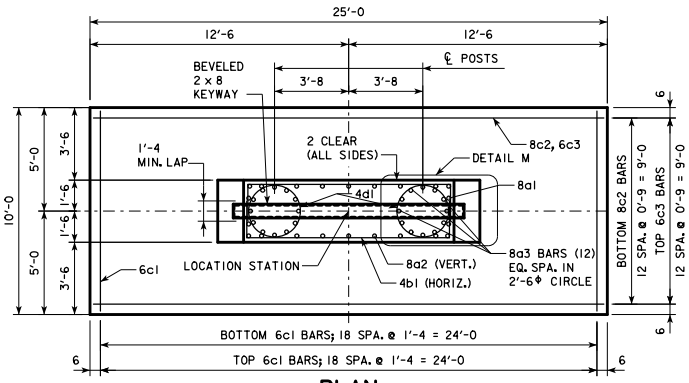

PLAN

ANCHOR BOLT ASSEMBLIES NOT SHOWN

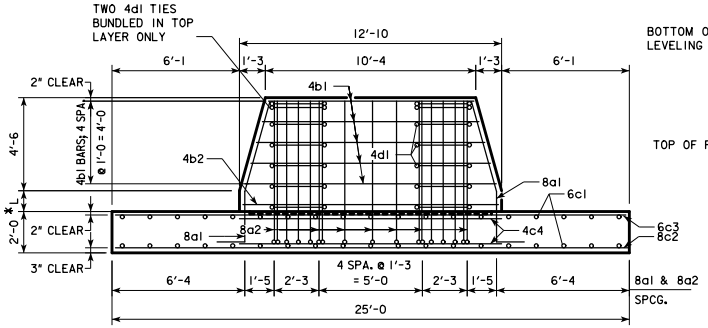

SIDE ELEVATION

ANCHOR BOLT ASSEMBLIES NOT SHOWN

*L SHALL BE LESS THAN 6'-0

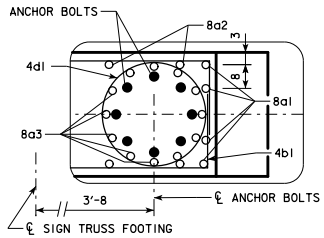

DETAIL M

ANCHOR BOLT AND ANCHOR REINFORCING PLACEMENT

KEYWAY NOT SHOWN

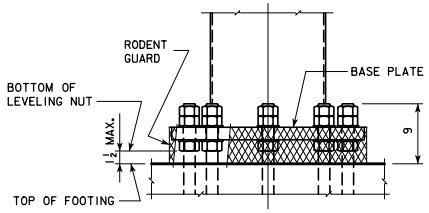

POST BASE DETAIL

SHOWING THE RODENT GUARD

THE RODENT GUARD SHALL BE PLACED AROUND THE BASE PLATE.

THE RODENT GUARD IS STAINLESS STEEL STANDARD GRADE WIRE CLOTH, ¼" MAXIMUM OPENING WITH A MINIMUM WIRE DIAMETER OF AWG NO. 16 WITH A MINIMUM 2" LAP.

SECURE WIRE CLOTH TO BASE PLATE AFTER ERECTION WITH ¾" STAINLESS STEEL BANDING. THE RODENT GUARD SHALL NOT EXTEND ABOVE THE TOP OF THE BASE PLATE.

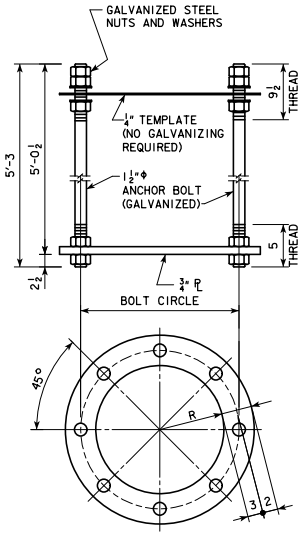

ANCHOR BOLT ASSEMBLY

	R	BOLT CIRCLE DIAMETER
FOR 14"Φ POSTS (50'-100' SPANS)	7	1'-8
FOR 16"Φ POSTS (105'-130' SPANS)	8	1'-10

GENERAL NOTES:

STRUCTURAL CONCRETE, CLASS C, SHALL BE USED FOR THE FOOTING.

EXCAVATION FOR FOOTING SHALL BE TO NEAT LINES AND CONCRETE SHALL BE PLACED AGAINST THE UNDISTURBED MATERIAL. ALL EXCAVATION FOR THE FOOTING SHALL BE DISPOSED OF IN THE AREA ADJACENT TO THE FOOTING AND SHAPED TO NORMAL GROUND CONTOUR, UNLESS OTHERWISE DIRECTED BY THE ENGINEER. MAXIMUM DESIGN BEARING CAPACITY IS 1.0 TONS PER SQUARE FOOT.

THE REQUIREMENTS PER FOOTING ARE TWO ANCHOR BOLT ASSEMBLIES INCLUDING SHIMS, NUTS (5 PER BOLT) AND WASHERS. REFER TO HARDWARE CLASSIFICATION TABLE FOR MATERIALS AND GALVANIZING REQUIREMENTS.

PRICE BID FOR CONTRACT ITEMS SHALL INCLUDE ALL LABOR AND MATERIALS NECESSARY TO CONSTRUCT OVERHEAD SIGN FOOTING AS DETAILED HEREON. THE COST OF FURNISHING AND INSTALLING ANCHOR BOLT ASSEMBLIES, CONDUIT, AND RODENT GUARDS ARE TO BE INCLUDED IN THE UNIT PRICE BID FOR STRUCTURAL CONCRETE. CONTRACT ITEMS FOR OVERHEAD SIGN FOOTING CONSTRUCTION ARE:

- EPOXY COATED REINFORCING STEEL, POUNDS
- STRUCTURAL CONCRETE (MISCELLANEOUS), CUBIC YARDS
- EXCAVATION, CUBIC YARDS OF CLASS SPECIFIED

ALL ANCHOR BOLT MATERIAL SHALL COMPLY WITH THE REQUIREMENTS OF IOWA DOT MATERIALS IM 453.08.

FOR DMS TRUSSES ONLY

ELECTRICAL CONDUIT IS REQUIRED IN FOOTINGS SUPPORTING TRUSSES WITH DYNAMIC MESSAGE SIGNS. SEE STANDARD SHEET SOST-18-11 FOR CONDUIT LOCATION DETAILS.

TOP-OF-WALL ELEVATION IS TO BE SET AT SAME ELEVATION AS HIGH POINT ON ROADWAY OR AS DIRECTED BY THE ENGINEER.

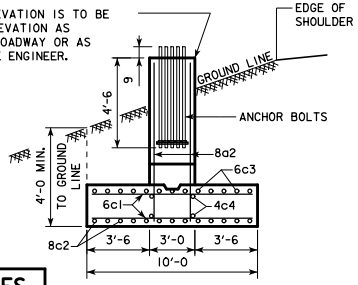

END ELEVATION

BENT BAR DETAILS (SHOP BEND ALL BARS)

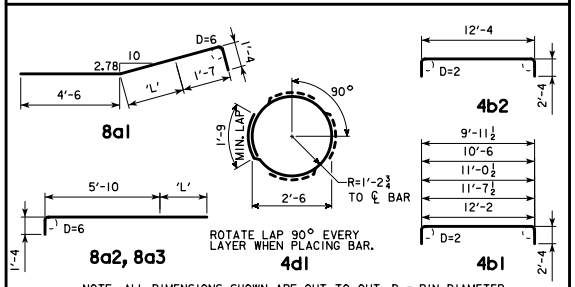

NOTE: ALL DIMENSIONS SHOWN ARE OUT TO OUT. D = PIN DIAMETER.

REINFORCING BAR LIST - EPOXY COATED

ONE FOOTING

SIZE	SHAPE	TABULATED VALUE FOR L = 0				EACH 1'-0 OF L		
		NO.	LENGTH	WEIGHT	SPACING	NO.	LENGTH	WEIGHT
8a1		8	7'-5	158	SEE DETAIL	8	1'-0 (A)	21
8a2		14	7'-2	268	SEE DETAIL	14	1'-0 (A)	37
8a3		24	7'-2	459	SEE DETAIL	24	1'-0 (A)	64
4b1		10	Varies	105	1'-0	---	---	---
4b2		---	---	---	---	2 (B)	17'-0	23
6c1		38	9'-6	542	1'-4	---	---	---
8c2		13	24'-6	850	0'-9	---	---	---
6c3		13	24'-6	478	0'-9	---	---	---
4c4		4	12'-8	34	SEE DETAIL	---	---	---
4d1		12**	9'-6	76	1'-0	2 (B)	9'-6	13
		TOTAL 2970 lbs				TOTAL 158 lbs		

(A) ADDITIONAL LENGTH TO BARS 8a1, 8a2, AND 8a3 FOR L > 0

(B) TWO IN EACH 1'-0 OF L ** BUNDLE TWO 4d1 CIRCULAR TIES IN TOP LAYER

CONCRETE PLACEMENT QUANTITIES

(ONE FOOTING)

ITEM	L = 0	EACH 1'-0 OF L
WALL	5.71	1.41
FOOTING	18.52	---
TOTAL (C.Y.)	24.23	1.41

ADDENDUM: ELECTRICAL DETAILS ADDED

LATEST REVISION DATE

APPROVED BY BRIDGE ENGINEER

Iowa Department of Transportation
Highway Division

STANDARD DESIGN

STEEL OVERHEAD SIGN TRUSS

SEPTEMBER, 2011

FOOTING DETAILS

50'-130' SPANS

MODIFIED
SOST-17-11

STEELOVERHEADSIGNTRUSS.DGN - MODIFIED SOST-17-11 - THIS SHEET ISSUED 6-12.

6/1/2012 8:43:54 AM jcolle W:\Projects\0000005012\BRFinal\00000560.brg SOST-17-11 11x17_pdf.pltcfg

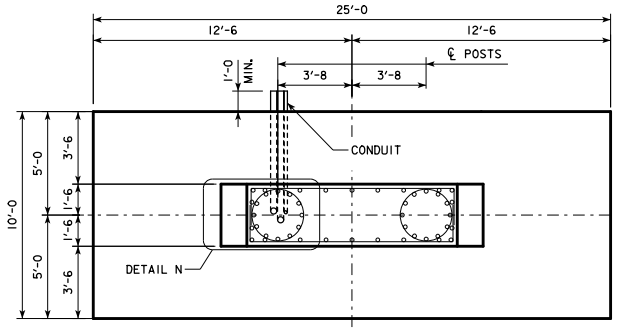

FOOTING PLAN FOR LEFT TRUSS SUPPORT

LOCATED AT MEDIAN FOR TYPICAL DESIGNS
ANCHOR BOLT ASSEMBLIES AND SELECTED REINFORCING BARS NOT SHOWN

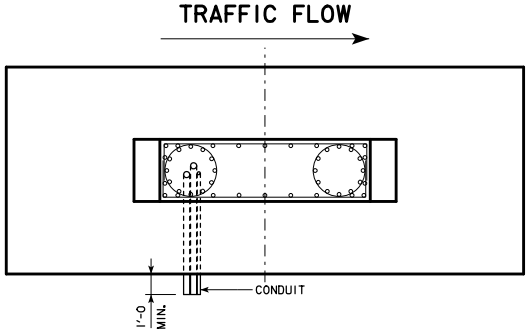

FOOTING PLAN FOR RIGHT TRUSS SUPPORT

LOCATED AT OUTSIDE SHOULDER FOR TYPICAL DESIGNS
ANCHOR BOLT ASSEMBLIES AND SELECTED REINFORCING BARS NOT SHOWN

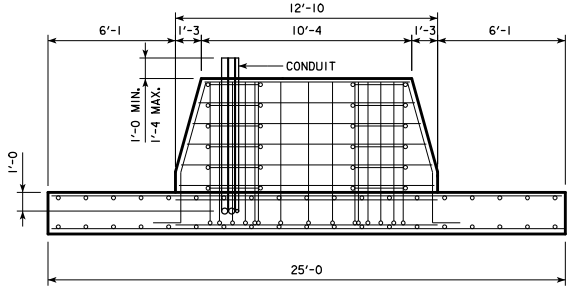

SIDE ELEVATION

ANCHOR BOLT ASSEMBLIES NOT SHOWN

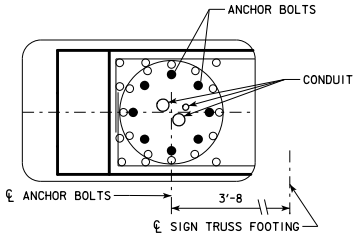

DETAIL N

LOCATION OF CONDUIT WITHIN ANCHOR BOLT CIRCLE

THIS SHEET FOR DMS TRUSSES ONLY

ELECTRICAL CONDUIT IS REQUIRED IN FOOTINGS SUPPORTING TRUSSES WITH DYNAMIC MESSAGE SIGNS.

NOTE: SEE THE FOLLOWING STANDARD SHEETS FOR ELECTRICAL ACCESS DETAILS IN SUPPORT POSTS FOR DMS TRUSS DESIGNS:

STANDARD SHEET SOST-06-11 FOR 14"Φ POSTS (50'-100' TRUSS SPANS)
STANDARD SHEET SOST-07-11 FOR 16"Φ POSTS (105'-130' TRUSS SPANS)

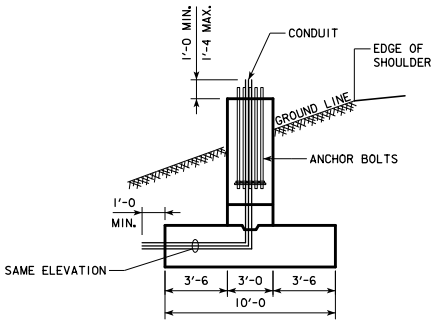

END ELEVATION

REINFORCING BARS NOT SHOWN

ADDENDUM: THIS SHEET ADDED

GENERAL NOTES:

FOR FOOTINGS SUPPORTING TRUSSES WITH DYNAMIC MESSAGE SIGNS, PLACE ONE 1"Φ CONDUIT AND TWO 2"Φ CONDUIT WITHIN THE ANCHOR BOLT CIRCLE CLOSEST TO THE DIRECTION OF THE APPROACHING TRAFFIC. EXTEND CONDUIT ENDS A MINIMUM OF 1'-0 ABOVE FOOTING WALL AND 1'-0 PAST EDGE OF FOOTING ON SIDE AWAY FROM ROADWAY. CONDUIT SHALL BE PLACED IN BOTH FOOTINGS UNLESS OTHERWISE INDICATED ON DETAIL PROJECT PLANS. ALL CONDUIT SHALL BE SCHEDULE 40 PLASTIC.

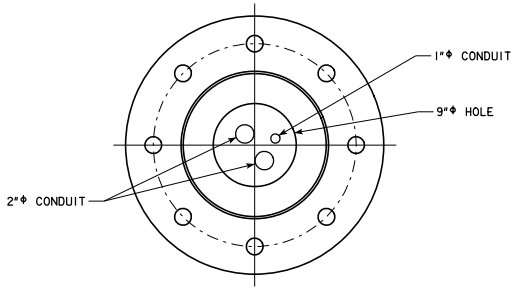

BASE PLATE PLAN

CONDUIT IS PRESENT ONLY IN POSTS WITH HAND HOLES

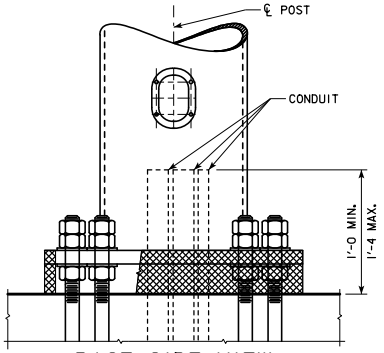

BASE SIDE VIEW

OPPOSITE OF TRAFFIC SIDE
NOT ALL ANCHOR BOLTS SHOWN

LATEST REVISION DATE

APPROVED BY BRIDGE ENGINEER

Iowa Department of Transportation
Highway Division

STANDARD DESIGN

STEEL OVERHEAD SIGN TRUSS

SEPTEMBER, 2011

CONDUIT LOCATION DETAILS

50'-130' SPANS

SOST-18-11

STEELOVERHEADSIGNTRUSS.DGN - SOST-18-11 - THIS SHEET ISSUED 9-11.

6/1/2012 8:43:55 AM jcolle W:\Projects\0000005012\BRFinal\00000560.brg SOST-18-11 11x17_pdf.pltcfg